MDOT
Michigan Department of Transportation

# OFFICE MEMORANDUM

**DATE:** January 27, 2025

**TO**: Standard Plan Book Holders

**FROM**: Kristin Schuster, P.E.

**SUBJECT**: Standard Plans R-28-K, R-29-J, R-88-E, R-110-B, R-112-J, & 127-H

The Michigan Department of Transportation has revised the subject standards as follows:

| | |
|---|---|
| Standard Plan R-28-K | Revised the maximum sidewalk cross slope from 2% to 2.1% and the term “practicable” to “feasible” to match the final ruling of the Public Right of Way Accessibility Guidelines (PROWAG). |
| Standard Plan R-29-J | Revised the maximum sidewalk cross slope from 2% to 2.1% to match the Public Right of Way Accessibility Guidelines (PROWAG) final ruling. |
| Standard Plan R-88-E | Eliminated the “C” dimension (to match the 2020 Standard Specifications for Construction) as this length of culvert is no longer paid for in the cost of the steel end section. |
| Standard Plan R-110-B | Extended the width of the aggregate base 12” beyond the edge of the shoulder pavement for new construction or reconstruction (sheet 2). |
| Standard Plan R-112-J | For non-freeway shoulders, eliminated the use of standard corrugations in favor of sinusoidal corrugations (mumble strips. On sheet four, added back the non-freeway shoulder corrugation layout detail. Clarified a note on the note sheet regarding the placement of corrugations in ramps areas. Revised the offset from a shoulder or centerline corrugation to the outside rail of railroad tracks from 25’ to 50’. Eliminated centerline corrugation gaps at commercial drives. |
| Standard Plan R-127-H | Revised the location of the beginning of red-backed delineators, along the outside shoulders of weave/merge lanes to the location of the red-backed delineators on the median side of the roadway, or to the prior ramps 2’ gore point, whichever requires fewer delineators. Also, added median side (yellow) delineators across from, and matching the outside shoulder (white) delineators on freeways and divided highways where the posted speed is at least 55 mph. |

Special Instructions:

For those choosing to maintain a loose-leaf hard copy of the Standard Plans, the following assembly instructions are provided. In addition to removing and replacing the appropriate standard plans with the enclosed revisions, remove standard plans R-44-F, R-50-G, R-54-I, R-55-G, R-97-C, B-21-J, B-25-K, B-26-F, B-27-A, B-102-C, B-103-E (a special detail has superseded these plans) and B-39-C (obsolete plan).

*Note that in some cases it may be necessary to retain the outdated plans until all projects using the superseded plans have been completed.*

Questions regarding revisions to the road details can be directed to MDOT-Road-Design-Standards@michigan.gov.

Questions regarding revisions to the bridge details can be directed to MDOT-Bridge-Design-Standards@miching.gov.

Sincerely,

E-SIGNED by KRISTIN SCHUSTER
on 2025-01-28 15:20:23 EST

Kristin Schuster, P.E.
Engineer of Design

Enclosures

cc: V. Zokvic
W. Pikka
C. Cavalieri

BOD:DD:QA:WKP:

# Index to Road Standard Plans

**January 27, 2025**

①

| STANDARD PLAN NUMBER | NUMBER OF SHEETS | TITLE | F.H.W.A. APPROVAL DATE OR * SPECIAL DETAIL |
|---|---|---|---|
| | | | |
| R-1-G | 9 | DRAINAGE STRUCTURES | 5-18-2020 |
| R-2-D | 4 | MANHOLE BASE TYPE 1 | 9-14-2001 |
| R-3-B | 2 | PRECAST MANHOLE TEES | 12-21-2001 |
| R-4-E | 4 | MANHOLE BASE TYPE 2 | 4-7-2022 |
| R-7-F | 2 | COVER B | 9-30-2014 |
| R-8-D | 3 | COVER C | 9-30-2014 |
| R-8X-D | 3 | COVER CX | 9-30-2014 |
| R-9-D | 2 | COVER D | 9-30-2014 |
| R-9X-E | 2 | COVER DX | 9-30-2014 |
| R-10-D | 1 | COVER E | 9-30-2014 |
| R-11-E | 1 | MONUMENT BOXES | 9-30-2014 |
| R-12-E | 1 | COVER G | 9-30-2014 |
| R-14-D | 2 | COVER J | 9-30-2014 |
| R-15-G | 3 | COVER K | 4-7-2022 |
| R-18-F | 2 | COVER Q | 9-30-2014 |
| R-20-D | 2 | COVER R | 9-30-2014 |
| R-20X-E | 2 | COVER RX | 4-7-2022 |
| R-22-F | 4 | COVER V | 5-18-2020 |
| R-23-E | 3 | COVER W | 5-18-2020 |
| R-24-F | 3 | COVER VG | 5-18-2020 |
| R-27-F | 1 | BRIDGE APPROACH CURB & GUTTER (USING EXISTING CATCH BASIN) | 4-7-2022 |
| R-28-K | 7 | CURB RAMP AND DETECTABLE WARNING DETAILS | 12-18-2024 |
| R-29-J | 4 | DRIVEWAY OPENINGS & APPROACHES, AND CONCRETE SIDEWALK | 12-18-2024 |
| R-30-G | 2 | CONCRETE CURB AND CONCRETE CURB & GUTTER | 9-30-2014 |
| R-31-F | 2 | INTEGRAL CURB AND INTEGRAL CURB & GUTTER | 1-25-2013 |
| | | | |

*** SPECIAL DETAILS WILL BE INCLUDED IN THE CONSTRUCTION PLANS**

# Index to Road Standard Plans

**January 27, 2025**

②

| STANDARD PLAN NUMBER | NUMBER OF SHEETS | TITLE | F.H.W.A. APPROVAL DATE OR * SPECIAL DETAIL |
|---|---|---|---|
| | | | |
| * R-32-F | | APPROACH CURB & GUTTER DOWNSPOUTS (FOR BRIDGE BARRIER ON RURAL HIGHWAYS) | Special Detail |
| R-33-G | 2 | CONCRETE VALLEY GUTTER AND URBAN FREEWAY CURB | 4-7-2022 |
| R-35-E | 2 | CONCRETE SHOULDER GUTTER AND SPILLWAY | 5-18-2020 |
| R-37-B | 2 | ISOLATION JOINT DETAILS | 9-10-2010 |
| R-38-C | 2 | CONCRETE DIVIDER | 1-25-2013 |
| R-39-K | 5 | TRANSVERSE PAVEMENT JOINTS (PLAIN CONCRETE PAVEMENT) | 2-21-2018 |
| R-40-I | 4 | LOAD TRANSFER ASSEMBLIES FOR TRANSVERSE JOINTS | 4-7-2022 |
| R-41-H | 2 | LONGITUDINAL PAVEMENT JOINTS | 9-30-2014 |
| R-42-F | 6 | TYPICAL JOINT LAYOUTS FOR CONCRETE PAVEMENT | 1-25-2013 |
| * R-43-J | | LOCATION OF TRANSVERSE JOINTS IN PLAIN CONCRETE PAVEMENT | Special Detail |
| * R-44-G | | CONCRETE PAVEMENT REPAIR | Special Detail |
| * R-45-K | | PAVEMENT REINFORCEMENT FOR BRIDGE APPROACH | Special Detail |
| R-46-D | 2 | PAVED AND COBBLE DITCHES, & DRAINAGE TREATMENT DETAILS | 9-10-2010 |
| R-49-G | 9 | CONCRETE BARRIER | 3-29-2018 |
| * R-50-H | | LIGHT STANDARD FOUNDATION (CONCRETE BARRIER, DOUBLE FACE) | Special Detail |
| * R-53-A | | TEMPORARY CONCRETE BARRIER LIMITED DEFLECTION | Special Detail |
| * R-54-J | | CONCRETE BARRIER, SINGLE FACE | Special Detail |
| * R-55-H | | FILLER WALLS AT BRIDGE PIER COLUMNS | Special Detail |
| * R-56-F | | GUARDRAIL MEDIAN OBJECT PROTECTION | Special Detail |
| R-59-E | 6 | GUARDRAIL AT BRIDGES AND EMBANKMENTS | 11-14-2003 |
| | | | |

*** SPECIAL DETAILS WILL BE INCLUDED IN THE CONSTRUCTION PLANS**

# Index to Road Standard Plans

**January 27, 2025**

③

| STANDARD PLAN NUMBER | NUMBER OF SHEETS | TITLE | F.H.W.A. APPROVAL DATE OR * SPECIAL DETAIL |
|---|---|---|---|
| | | | |
| * R-60-J | | GUARDRAIL, TYPES A, B, BD, T, TD, MGS-8, & MGS-8D | Special Detail |
| * R-62-H | | GUARDRAIL APPROACH TERMINAL TYPE 2M | Special Detail |
| * R-63-C | | GUARDRAIL APPROACH TERMINAL TYPES 3B & 3T | Special Detail |
| * R-66-E | | GUARDRAIL DEPARTING TERMINAL TYPES B, T, & MGS | Special Detail |
| * R-67-G | | GUARDRAIL ANCHORAGE, BRIDGE, DETAILS | Special Detail |
| R-70-C | 10 | LOW TENSION 3-CABLE BARRIER | 4-26-2007 |
| R-71-C | 1 | GUARDRAIL ANCHORAGE, MEDIAN | 3-29-2018 |
| * R-72-D | | GUARDRAIL LONG SPAN INSTALLATIONS | Special Detail |
| * R-73-F | | GUARDRAIL OVER BOX OR SLAB CULVERTS | Special Detail |
| R-74-D | 2 | BUMPER & PARKING RAILS, AND MISC. WOOD POSTS | 9-14-2001 |
| R-76-E | 3 | CONCRETE GLARE SCREEN | 3-29-2018 |
| * R-80-F | | GRANULAR BLANKET, UNDERDRAINS, OUTLET ENDINGS FOR UNDERDRAINS, AND SEWER BULKHEADS | Special Detail |
| R-82-D | 2 | BEDDING AND FILLING AROUND PIPE CULVERTS | 11-14-2003 |
| R-83-C | 5 | UTILITY TRENCHES | 7-25-2017 |
| R-84-A | 1 | BOX CULVERT JOINT TIE ASSEMBLIES | 5-18-2020 |
| R-85-D | 2 | OUTLET HEADWALLS | 11-17-2005 |
| R-86-F | 2 | PRECAST CONCRETE END SECTION FOR PIPE CULVERT | 5-18-2020 |
| R-88-E | 4 | STEEL END SECTION | 12-18-2024 |
| R-92-C | 6 | STEEL GRATES FOR END SECTIONS | 9-14-2001 |
| R-95-G | 7 | CULVERT SLOPED END SECTIONS | 5-18-2020 |
| R-96-E | 6 | SOIL EROSION & SEDIMENTATION CONTROL MEASURES | 9-10-2010 |
| * R-97-D | | HIGH TENSILE EIGHT WIRE FENCE | Special Detail |
| R-98-B | 2 | CHAIN LINK FENCE (USING TENSION WIRE) | 9-14-2001 |
| | | | |

*** SPECIAL DETAILS WILL BE INCLUDED IN THE CONSTRUCTION PLANS**

# Index to Road Standard Plans

**January 27, 2025**

④

| STANDARD PLAN NUMBER | NUMBER OF SHEETS | TITLE | F.H.W.A. APPROVAL DATE OR * SPECIAL DETAIL |
|---|---|---|---|
| | | | |
| * R-100-I | | SEEDING AND TREE PLANTING | Special Detail |
| R-101-B | 3 | WOVEN WIRE FENCE | 9-14-2001 |
| R-102-C | 1 | INSTALLATION OF WOVEN WIRE FENCE (AT STRUCTURES) | 4-7-2022 |
| R-103-C | 7 | TREATMENT OF PEAT MARSHES | 10-21-2008 |
| R-105-D | 6 | GRADING CROSS-SECTIONS | 11-14-2003 |
| R-107-H | 7 | SUPERELEVATION AND PAVEMENT CROWNS | 9-10-2010 |
| R-110-B | 3 | PAVEMENT SAFETY EDGE | 12-18-2024 |
| R-112-J | 10 | SHOULDER AND CENTER LINE CORRUGATIONS | 12-18-2024 |
| R-113-C | 2 | TEMPORARY CROSSOVERS FOR DIVIDED ROADWAYS | 10-27-2004 |
| R-121-B | 4 | TRACK CROSSINGS | 9-14-2001 |
| R-122-C | 2 | RAILROAD CROSSING SIGNALS | 9-16-2009 |
| * R-126-I | | PLACEMENT OF TEMPORARY CONCRETE BARRIER AND TEMPORARY STEEL BARRIER | Special Detail |
| R-127-H | 8 | DELINEATOR INSTALLATIONS | 12-18-2024 |
| * R-130-A | | LIGHT STANDARD DETAILS | Special Detail |
| | | | |

*** SPECIAL DETAILS WILL BE INCLUDED IN THE CONSTRUCTION PLANS**

Notes: Former Standard Plans IV-87, IV-89, IV-90, and IV-91 Series, used for building cast in place concrete head walls for elliptical and circular pipe culverts, are now being replaced with plans that detail each specific size. The Bureau of Bridges & Structures, Structure Design Section, Special Structures Unit will provide special details for inclusion in construction plans for MDOT jobs. To ensure prompt delivery, requests **must be made in advance**. Contact: MDOT-TriezenbergSquad@Michigan.gov.

Former Standard Plans IV-93 and IV-94 series have been replaced with precast concrete box and three-sided culverts as per the 2020 Standard Specifications for Construction

# Index to Bridge Standard Plans

**January 27, 2025**

⑤

| STANDARD PLAN NUMBER | NUMBER OF SHEETS | TITLE | F.H.W.A. APPROVAL DATE OR * SPECIAL DETAIL |
|---|---|---|---|
| | | | |
| * B-21-K | | BRIDGE RAILING, 2 TUBE | Special Detail |
| B-22-E | 5 | BRIDGE RAILING, THRIE BEAM RETROFIT (R4 TYPE BRIDGE RAILING) | 4-7-2022 |
| B-23-F | 6 | BRIDGE RAILING, THRIE BEAM RETROFIT (OPEN PARAPET TYPE BRIDGE RAILING) | 4-7-2022 |
| * B-25-L | | BRIDGE RAILING, AESTHETIC PARAPET TUBE | Special Detail |
| * B-26-G | | BRIDGE RAILING, 4 TUBE | Special Detail |
| * B-27-B | | BRIDGE RAILING, 3 TUBE WITH PICKETS | Special Detail |
| * B-28-A | | BRIDGE BARRIER RAILING, TYPE 7 | Special Detail |
| * B-29-A | | BRIDGE BARRIER RAILING, TYPE 6 | Special Detail |
| B-32-D | 2 | FENCING FOR PEDESTRIAN STRUCTURE EXISTING OPEN PARAPET | 1-25-2013 |
| B-33-D | 2 | FENCING FOR PEDESTRIAN STRUCTURE EXISTING METAL RAILING – R4 POST | 1-25-2013 |
| B-34-C | 2 | FENCING FOR PEDESTRIAN STRUCTURE EXISTING METAL RAILING – R5 OR R9 POST | 9-29-2003 |
| B-35-D | 2 | FENCING FOR PEDESTRIAN STRUCTURE EXISTING SOLID PARAPET | 1-25-2013 |
| B-37-C | 2 | FENCING FOR PEDESTRIAN STRUCTURE 2 OR 5 TUBE STEEL RAILING | 9-29-2003 |
| B-38-D | 2 | FENCING FOR PEDESTRIAN STRUCTURE EXISTING TYPE 4 & 5 BARRIER | 1-25-2013 |
| B-40-A | 3 | FENCING FOR BRIDGE RAILING, 4 TUBE | 9-29-2003 |
| B-41-C | 3 | FENCING FOR BRIDGE RAILING, AESTHETIC PARAPET TUBE | 10-21-2008 |
| B-50-A | 3 | BRIDGE RAILING, CONCRETE BLOCK RETROFIT | 4-7-2022 |
| B-101-G | 2 | DRAIN CASTING ASSEMBLY DETAILS | 4-7-2022 |
| * B-102-D | | STANDARD SLOPE PAVING DETAILS | Special Detail |
| * B-103-F | | MOLDING, BEVEL, LIGHT STANDARD ANCHOR BOLT ASSEMBLY AND NAME PLATE DETAILS | Special Detail |
| | | | |

*** SPECIAL DETAILS WILL BE INCLUDED IN THE CONSTRUCTION PLANS**

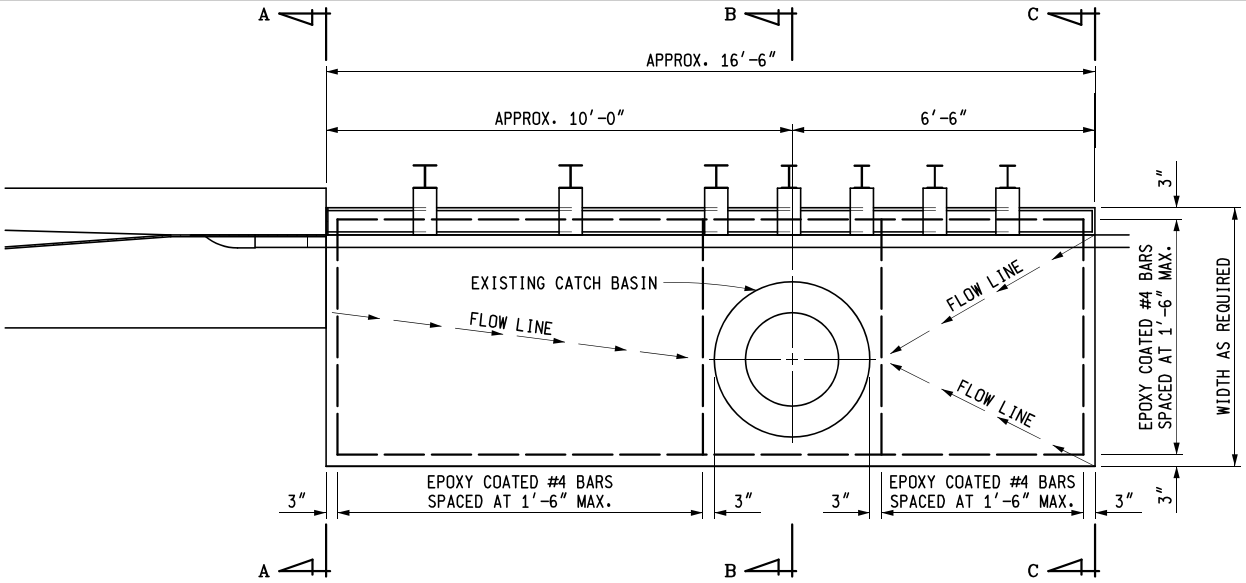


PLAN

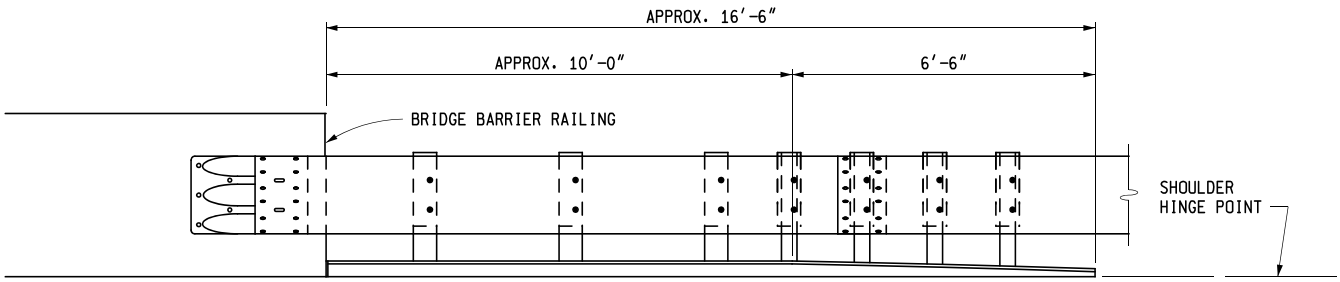


ELEVATION

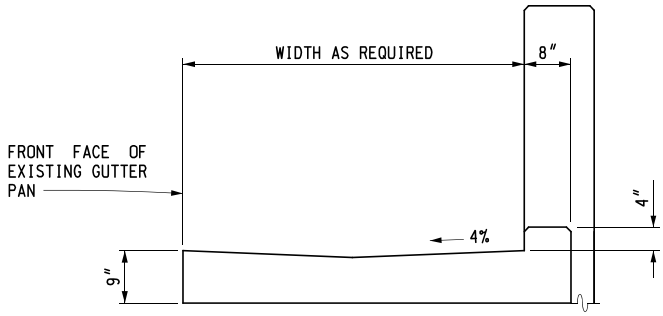


SECTION A - A

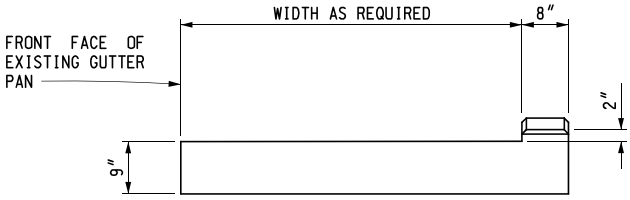


SECTION C - C

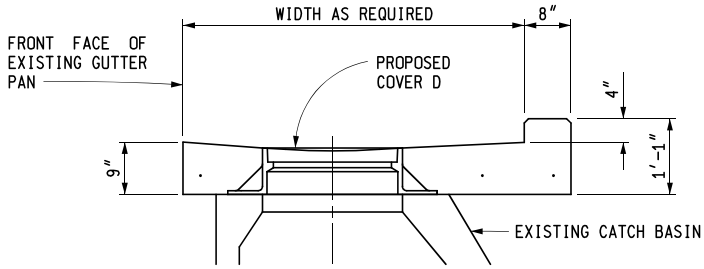


SECTION B - B

NOTES:

FOR INSTALLATION OF BEAM GUARDRAIL, SEE STANDARD PLAN R-60-SERIES.

FOR INSTALLATION OF GUARDRAIL ANCHORAGE, BRIDGE, SEE STANDARD PLAN R-67-SERIES.

IF AN INTEGRAL OR SEMI-INTEGRAL ABUTMENT IS NOT USED SEE R-32-SERIES FOR ACCOMMODATING EXPANSION IN THE AREA OF THE PAVEMENT SEAT.

# BRIDGE APPROACH CURB & GUTTER, DETAIL 4A

(USING EXISTING CATCH BASIN)

NOTE: FOR USE WITH GUARDRAIL ANCHORAGE, BRIDGE, DETAIL M - __ AND THE REQUIRED NUMBER OF DRAINAGE STRUCTURES BASED ON A HYDROLOGICAL ANALYSIS OF THE AREA AND THE SIZE OF THE BRIDGE DECK OR WHEN GUARDRAIL IS NOT NEEDED ON DEPARTING ENDS.

MDOT Michigan Department of Transportation

PREPARED BY DESIGN DIVISION

DRAWN BY: B.L.T.

CHECKED BY: W.K.P.

DEPARTMENT DIRECTOR
Paul C. Ajegba

APPROVED BY: Gregg Brunner, P.E. Gregg Brunner Oct 14 2021 12:31 PM
DIRECTOR, BUREAU OF FIELD SERVICES

APPROVED BY: Bradley C. Wieferich Bradley C. Wieferich Oct 14 2021 11:01 AM
DIRECTOR, BUREAU OF DEVELOPMENT

MICHIGAN DEPARTMENT OF TRANSPORTATION
BUREAU OF DEVELOPMENT STANDARD PLAN FOR

BRIDGE APPROACH CURB & GUTTER
(USING EXISTING CATCH BASIN)

| 4-7-2022 | 10-14-2019 | R-27-F | SHEET 1 OF 1 |
|---|---|---|---|
| F.H.W.A. APPROVAL | PLAN DATE | | |

* MAXIMUM LANDING SLOPE IS 2.1% IN EACH DIRECTION OF TRAVEL. LANDING MINIMUM DIMENSIONS 5' x 5'. SEE NOTES.

** MAXIMUM RAMP CROSS SLOPE IS 2.1%, RUNNING SLOPE 5% - 7% (8.3% MAXIMUM). SEE NOTES.

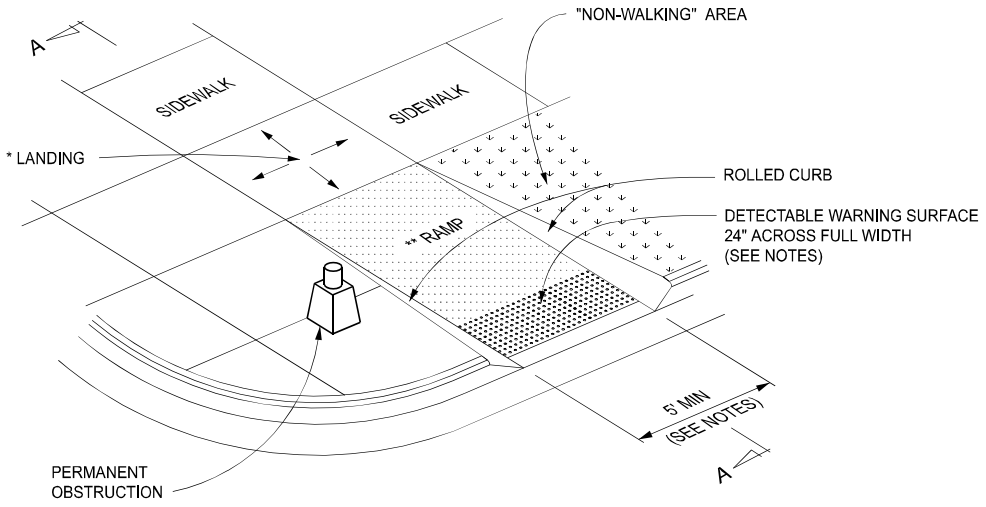


## CURB RAMP TYPE R

(ROLLED SIDES)

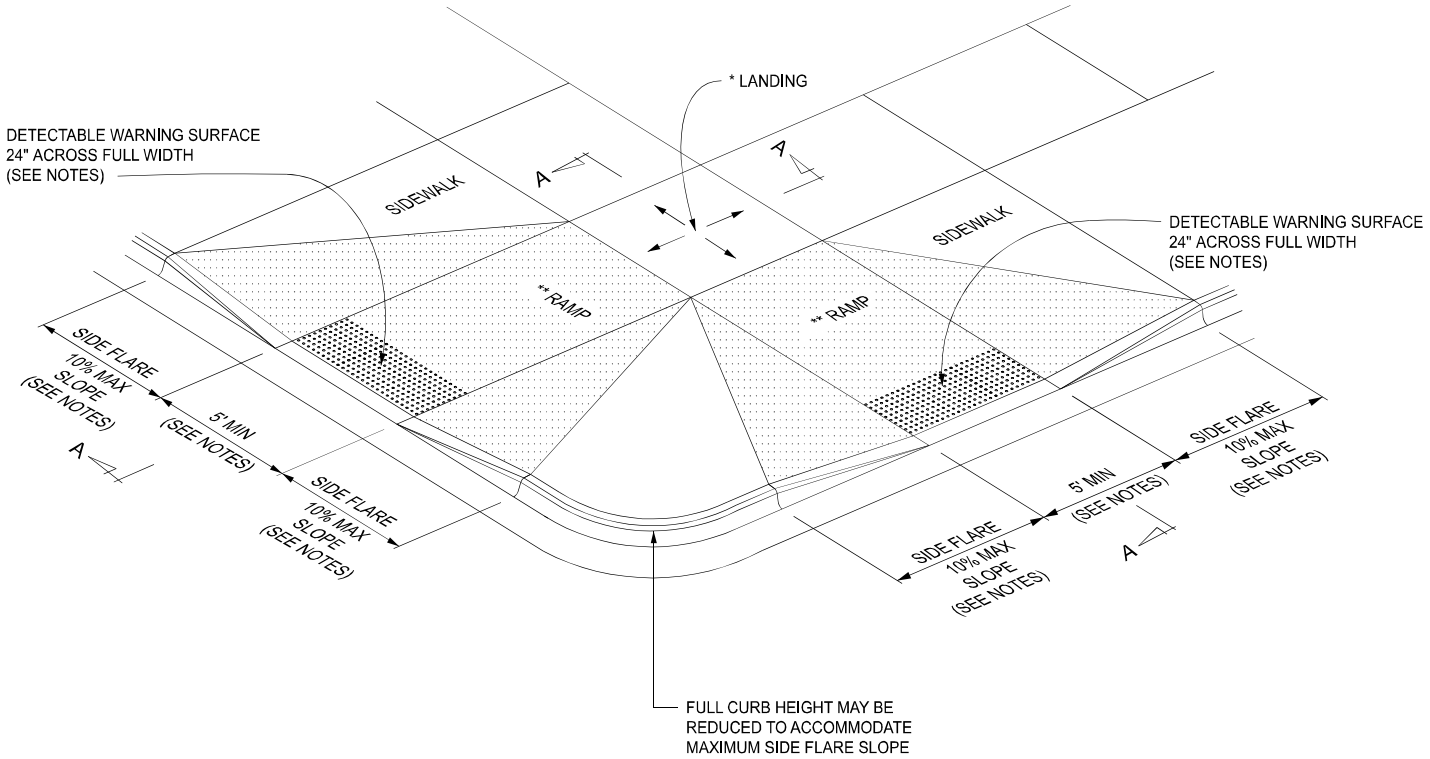


## CURB RAMP TYPE F

(FLARED SIDES, TWO RAMPS SHOWN)

| | | | |
|---|---|---|---|
| APPROVED BY: E-SIGNED by JASON GUTTING on 2024-09-24 12:54:17 EDT<br>DIRECTOR, BUREAU OF FIELD SERVICES | MDOT Michigan Department of Transportation | STANDARD PLAN FOR<br>CURB RAMP AND<br>DETECTABLE WARNING DETAILS | |
| APPROVED BY: E-SIGNED by Demetrius Parker on 2024-09-10 07:51:29 EDT<br>DIRECTOR, BUREAU OF DEVELOPMENT | DEPARTMENT DIRECTOR<br>BRADLEY C. WIEFERICH, PE | 12/18/2024 FHWA APPROVAL<br>06/21/2014 PLAN DATE | R-28-K | SHEET 1 OF 7 |

* MAXIMUM LANDING SLOPE IS 2.1% IN EACH DIRECTION OF TRAVEL. LANDING MINIMUM DIMENSIONS 5' x 5'. SEE NOTES.

** MAXIMUM RAMP CROSS SLOPE IS 2.1%, RUNNING SLOPE 5% - 7% (8.3% MAXIMUM). SEE NOTES.

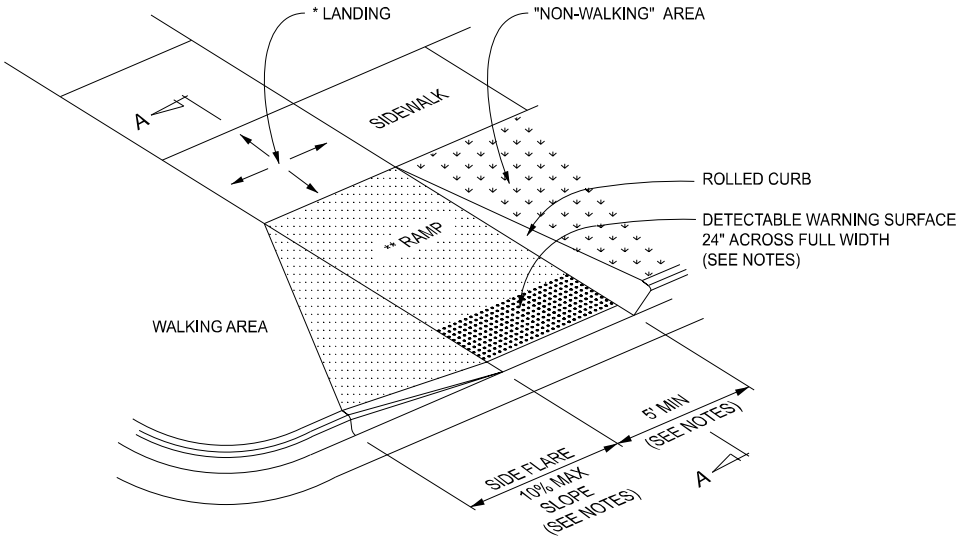


## CURB RAMP TYPE RF

(ROLLED / FLARED SIDES)

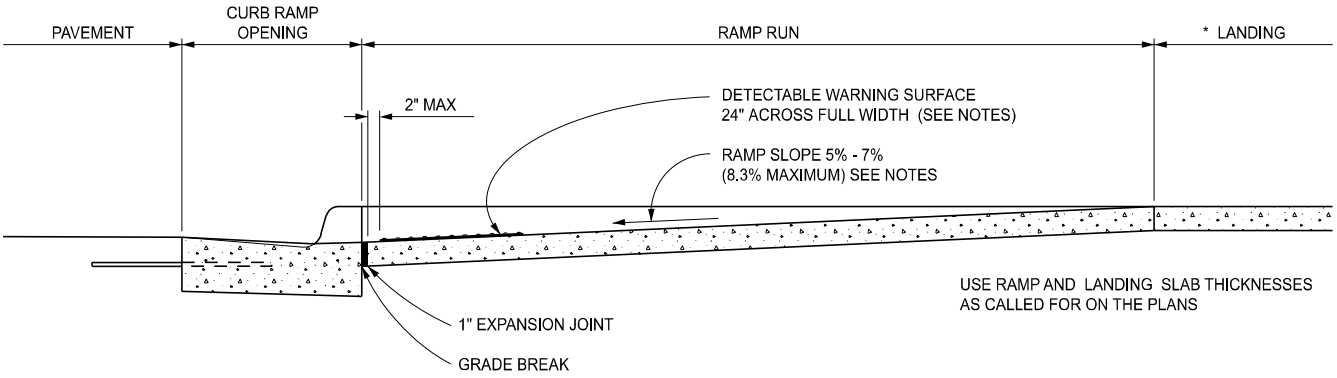


## SECTION A-A

| CURB TYPE | MAXIMUM RISE (INCHES) | |
|---|---|---|
| | A | B |
| B1 | ¾ | 1 |
| B2 | ¾ | 1 |
| B3 | ¾ | 1 |
| D1 | ¾ | 1 |
| D2 | ¾ | 1 |
| D3 | ¾ | 1 |
| C1 | ½ | ½ |
| C2 | ½ | ½ |
| C3 | ¾ | ½ |
| C4 | ¾ | ½ |
| C5 | 1 | ½ |
| C6 | 1 | ½ |
| F1 | ½ | ½ |
| F2 | ½ | ½ |
| F3 | ¾ | ½ |
| F4 | ¾ | ½ |
| F5 | 1 | ½ |
| F6 | 1 | ½ |

FOR CURB TYPES SEE STANDARD PLAN R-30-SERIES

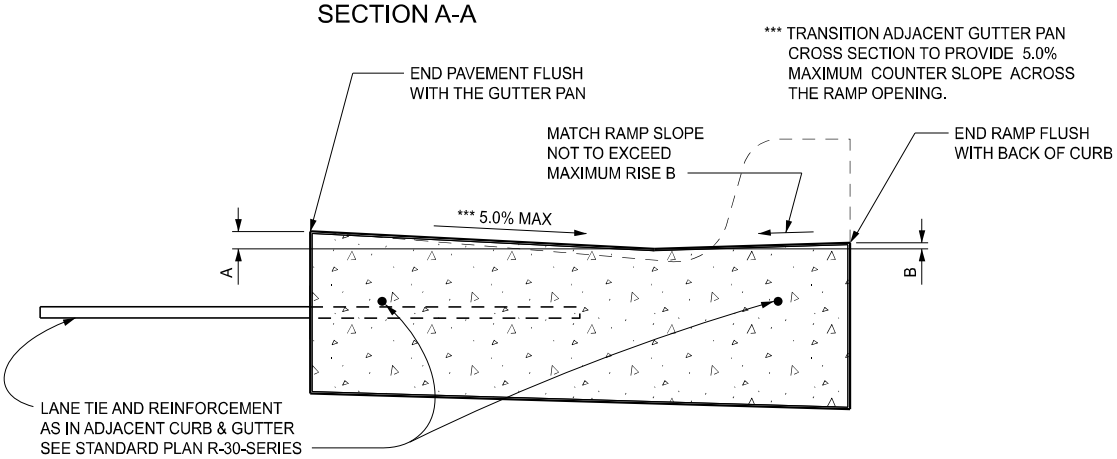


## SECTION THROUGH CURB RAMP OPENING

(TYPICAL ALL RAMP TYPES)

MDOT
Michigan Department of Transportation

DEPARTMENT DIRECTOR
BRADLEY C. WIEFERICH, PE

STANDARD PLAN FOR
CURB RAMP AND
DETECTABLE WARNING DETAILS

| 12/18/2024 | 06/21/2014 | R-28-K | SHEET |
|---|---|---|---|
| FHWA APPROVAL | PLAN DATE | | 2 OF 7 |

* MAXIMUM LANDING SLOPE IS 2.1% IN EACH DIRECTION OF TRAVEL. LANDING MINIMUM DIMENSIONS 5' x 5'. SEE NOTES.

** MAXIMUM RAMP CROSS SLOPE IS 2.1%, RUNNING SLOPE 5% - 7% (8.3% MAXIMUM). SEE NOTES.

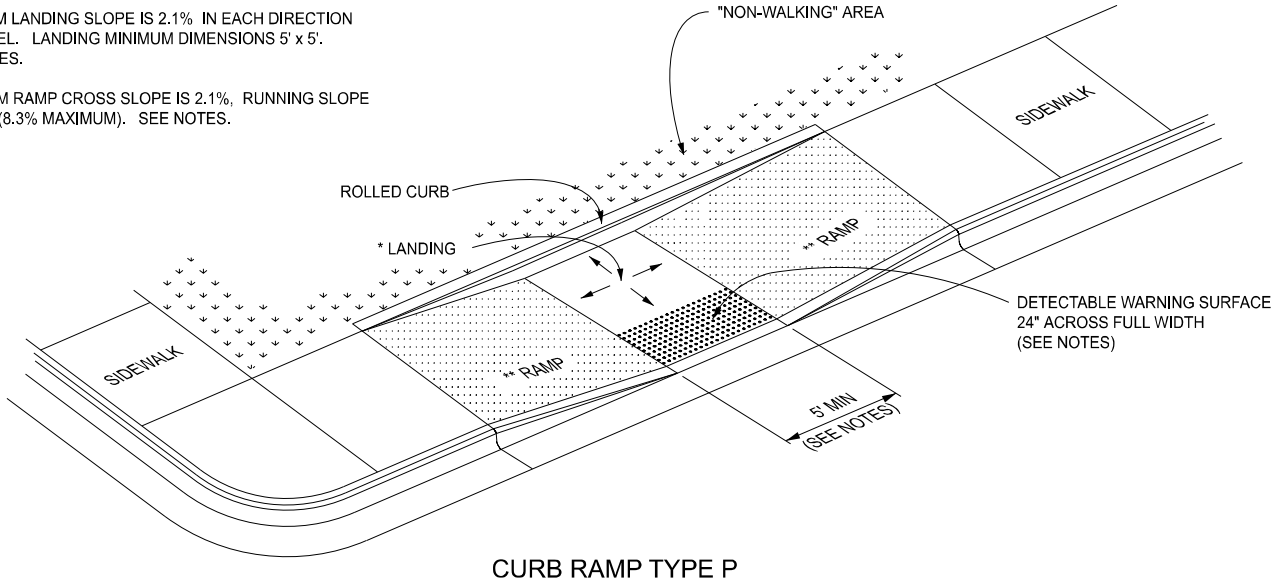


## CURB RAMP TYPE P

(PARALLEL RAMP)
DO NOT USE IN AREAS WHERE PONDING MAY OCCUR

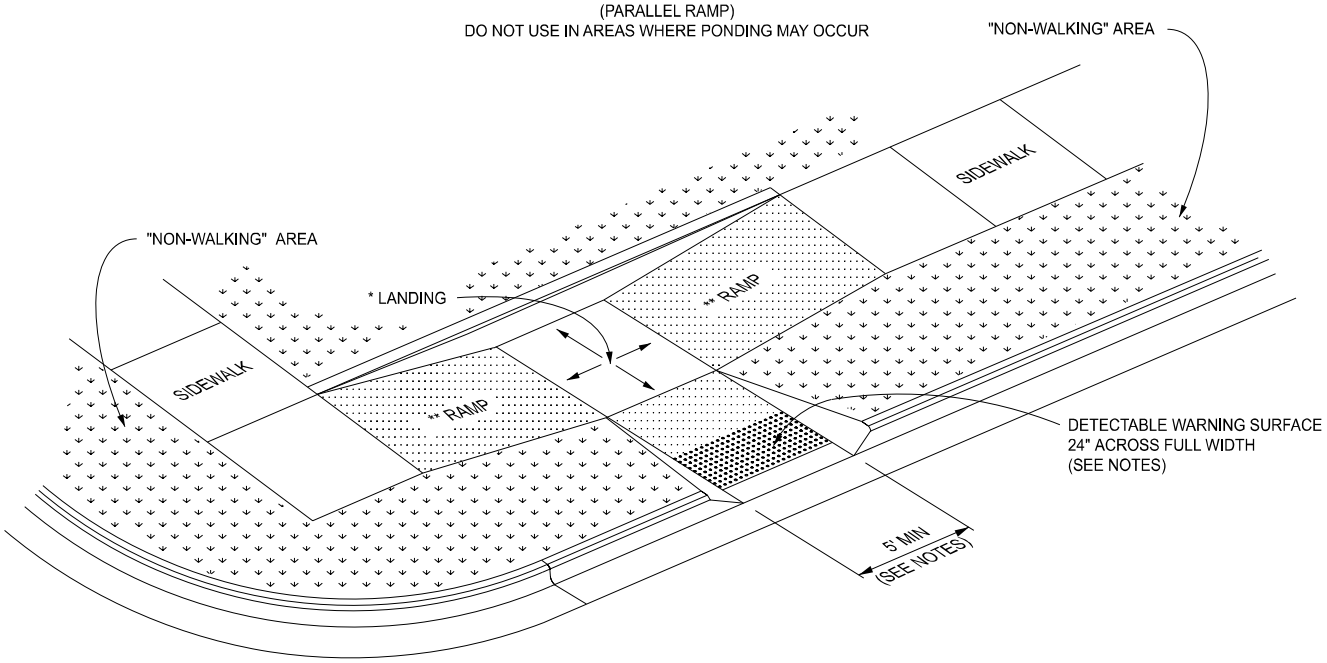


## CURB RAMP TYPE C

(COMBINATION RAMP)

USE 24" DETECTABLE WARNING SURFACE ACROSS FULL WIDTH IF MEDIAN WIDTH IS AT LEAST 6'-0". OTHERWISE NO DETECTABLE WARNING IS REQUIRED.

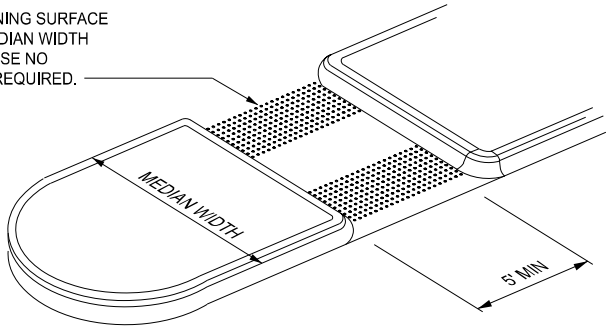


## CURB RAMP TYPE M

(MEDIAN ISLAND)

| MDOT Michigan Department of Transportation | STANDARD PLAN FOR CURB RAMP AND DETECTABLE WARNING DETAILS | | | |
|---|---|---|---|---|
| DEPARTMENT DIRECTOR BRADLEY C. WIEFERICH, PE | 12/18/2024 FHWA APPROVAL | 06/21/2024 PLAN DATE | R-28-K | SHEET 3 OF 7 |

* MAXIMUM LANDING SLOPE IS 2.1% IN EACH DIRECTION OF TRAVEL. LANDING MINIMUM DIMENSIONS 5' x 5'. SEE NOTES.

** MAXIMUM RAMP CROSS SLOPE IS 2.1%, RUNNING SLOPE 5% - 7% (8.3% MAXIMUM). SEE NOTES.

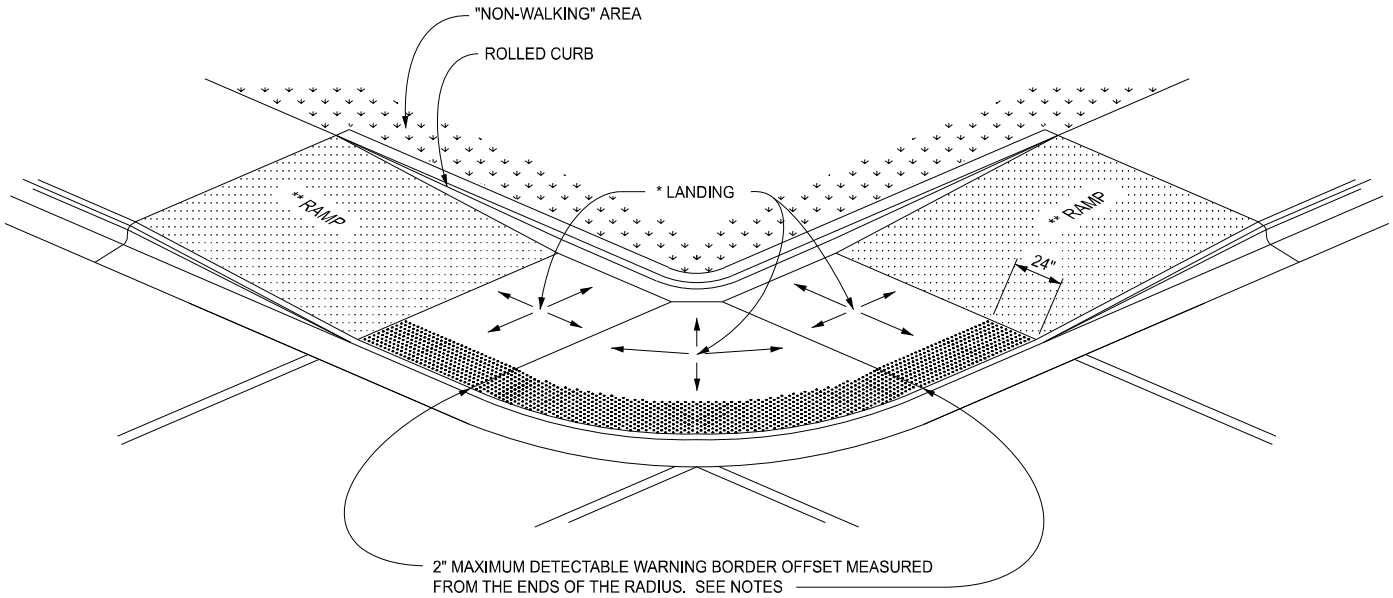


( RADIAL DETECTABLE WARNING SHOWN )

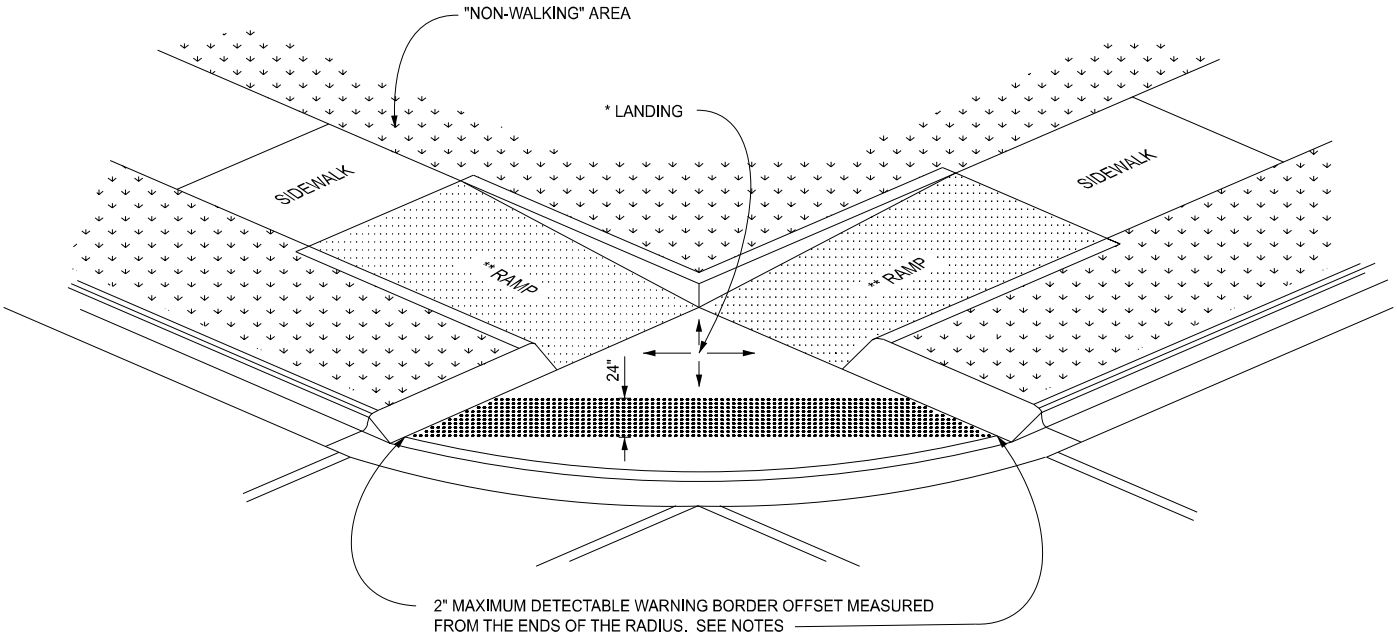


( TANGENT DETECTABLE WARNING SHOWN )

## CURB RAMP TYPE D

(DEPRESSED CORNER)

USE ONLY WHEN INDEPENDENT DIRECTIONAL RAMPS CAN NOT BE CONSTRUCTED FOR EACH CROSSING DIRECTION

| | | | | |
|---|---|---|---|---|
| MDOT Michigan Department of Transportation<br>DEPARTMENT DIRECTOR<br>BRADLEY C. WIEFERICH, PE | STANDARD PLAN FOR<br>CURB RAMP AND<br>DETECTABLE WARNING DETAILS | | | |
| | 12/18/2024<br>FHWA APPROVAL | 06/21/2024<br>PLAN DATE | R-28-K | SHEET<br>4 OF 7 |

* LOCATE THE DETECTABLE WARNING SURFACE SO THAT THE EDGE NEAREST THE RAIL CROSSING IS 6' MINIMUM AND 15' MAXIMUM FROM THE CENTERLINE OF THE NEAREST RAIL. DO NOT PLACE DETECTABLE WARNING ON RAILROAD CROSSING MATERIAL.

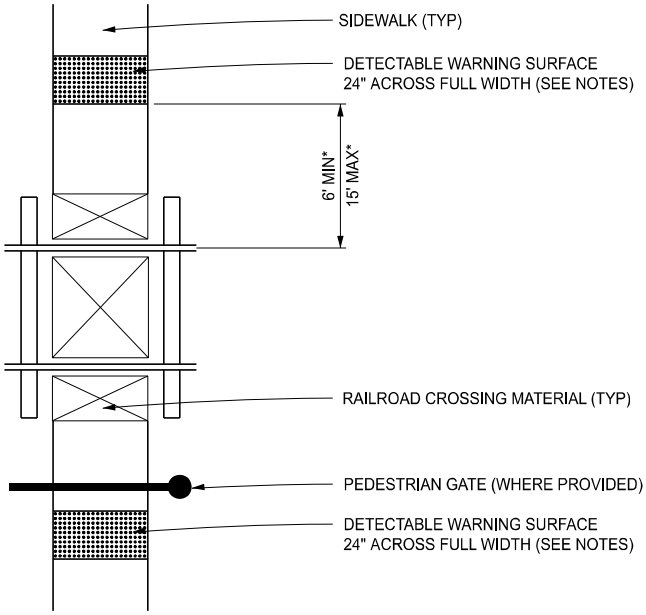


DETECTABLE WARNING AT RAILROAD CROSSING

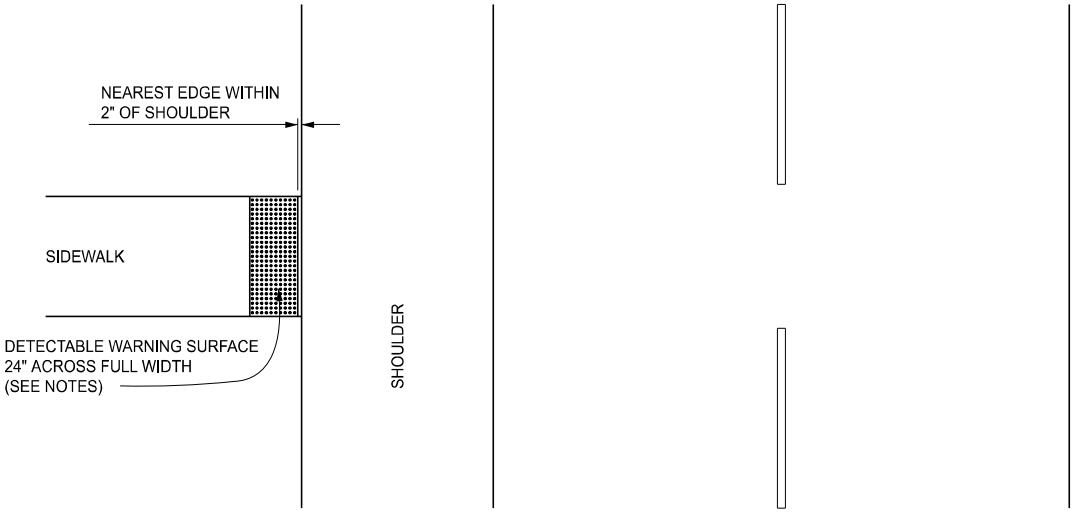


DETECTABLE WARNING AT FLUSH SHOULDER OR ROADWAY

| | | | | |
|---|---|---|---|---|
| MDOT Michigan Department of Transportation | STANDARD PLAN FOR CURB RAMP AND DETECTABLE WARNING DETAILS | | | |
| DEPARTMENT DIRECTOR BRADLEY C. WIEFERICH, PE | 12/18/2024 FHWA APPROVAL | 06/21/2024 PLAN DATE | R-28-K | SHEET 5 OF 7 |

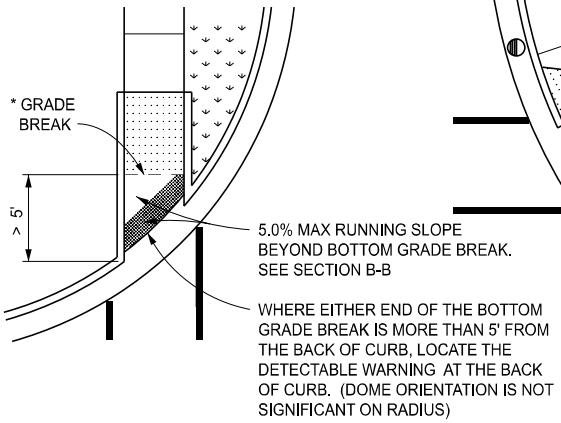


CURB RAMP LOCATED IN RADIUS (TYPE R SHOWN)
(GRADE BREAK OFFSET GREATER THAN 5')

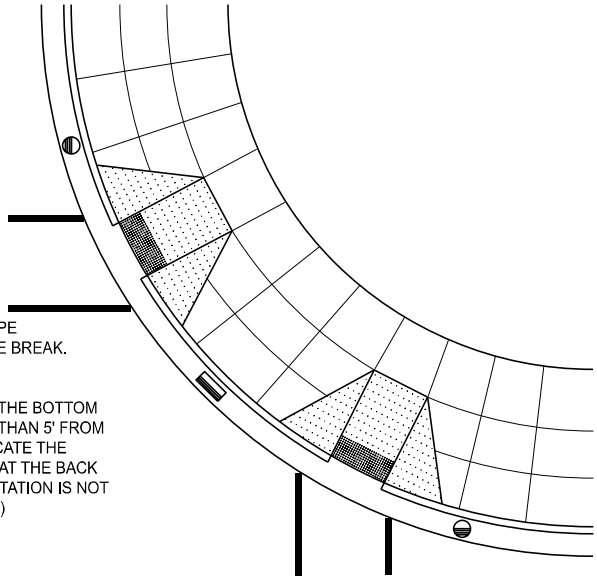

CURB RAMP PERPENDICULAR TO RADIAL CURB (TYPE F SHOWN)

(USE WITH RADIAL CURB WHEN THE CROSSWALK AND CURB RAMP ARE NOT ALIGNED)

## LEGEND

- SLOPED SURFACE
- DETECTABLE WARNING
- "NON-WALKING" AREA
- CROSSWALK MARKING
- PREFERRED LOCATION OF DRAINAGE INLET (TYP)
- ALTERNATE LOCATION OF DRAINAGE INLET (TYP)

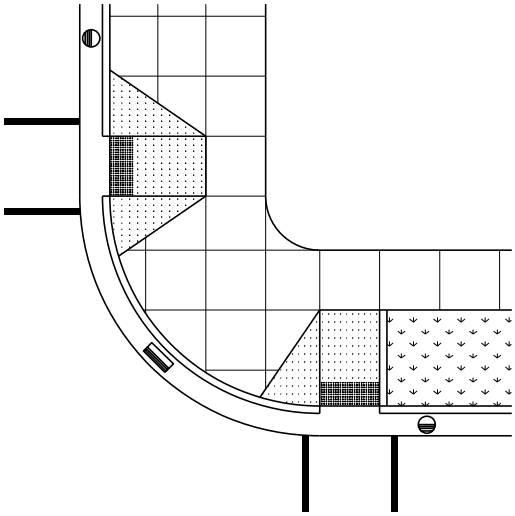

CURB RAMP PERPENDICULAR TO TANGENT CURB
(TYPE F AND TYPE RF SHOWN)

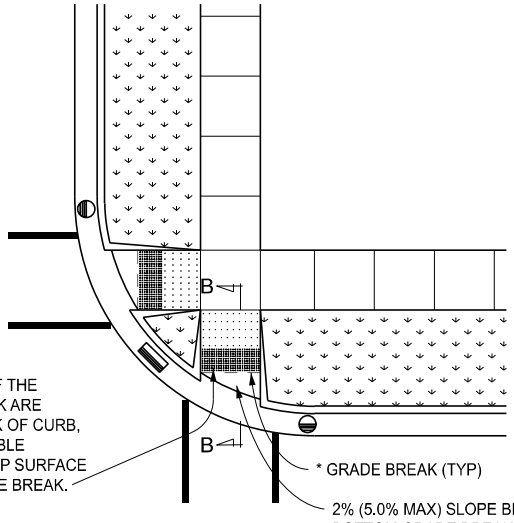


CURB RAMP LOCATED IN RADIUS (TYPE R SHOWN)
(GRADE BREAK OFFSET LESS THAN 5')

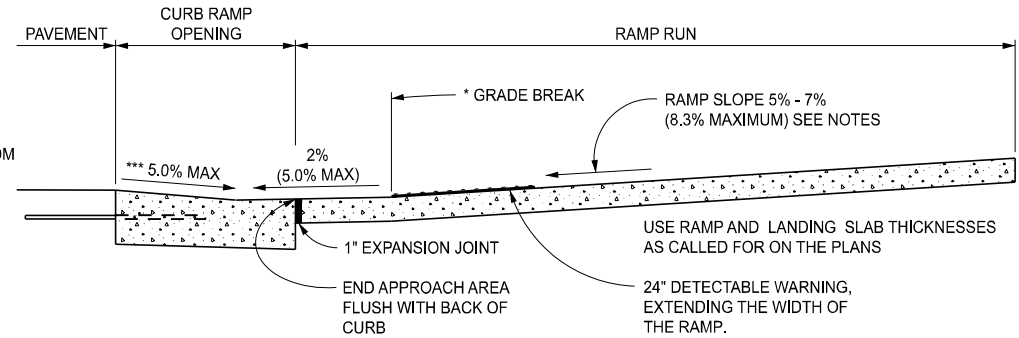


* ENSURE GRADE BREAKS AT THE TOP AND BOTTOM OF CURB RAMPS BE PERPENDICULAR TO THE DIRECTION OF TRAVEL.

*** TRANSITION ADJACENT GUTTER PAN CROSS SECTION TO PROVIDE 5.0% MAXIMUM COUNTER SLOPE ACROSS THE RAMP OPENING.

SEE SHEET 2 FOR CURB RAMP OPENING DETAILS.

SECTION B-B

CURB RAMP ORIENTATION

MDOT Michigan Department of Transportation

DEPARTMENT DIRECTOR
BRADLEY C. WIEFERICH, PE

STANDARD PLAN FOR
CURB RAMP AND
DETECTABLE WARNING DETAILS

| 12/18/2024 | 06/21/2024 | R-28-K | SHEET |
|---|---|---|---|
| FHWA APPROVAL | PLAN DATE | | 6 OF 7 |

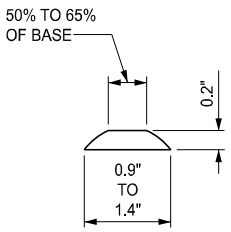


DOME SECTION

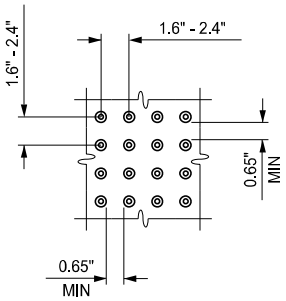


DOME SPACING

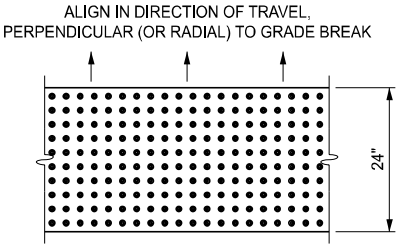


DOME ALIGNMENT

## DETECTABLE WARNING DETAILS

NOTES:

APPLY DETAILS SPECIFIED ON THIS PLAN TO ALL CONSTRUCTION, RECONSTRUCTION, OR ALTERATION OF STREETS, CURBS, OR SIDEWALKS IN THE PUBLIC RIGHT OF WAY.

LOCATE CURB RAMPS AS SPECIFIED ON THE PLANS OR AS DIRECTED BY THE ENGINEER.

PROVIDE RAMPS AT ALL CORNERS OF AN INTERSECTION WHERE THERE IS EXISTING OR PROPOSED SIDEWALK AND CURB. PROVIDE RAMPS AT MARKED AND/OR SIGNALIZED MID-BLOCK CROSSINGS.

PROVIDE SURFACE TEXTURE TO THE RAMP BY COARSE BROOMING, TRANSVERSE TO THE RUNNING SLOPE.

RAMP THE SIDEWALK WHERE THE DRIVEWAY CURB IS EXTENDED ACROSS THE WALK.

ENSURE A UNIFORM GRADE ON THE RAMP. SLOPE THE RAMP IN ONLY ONE DIRECTION, PARALLEL TO THE DIRECTION OF TRAVEL, WHERE CONDITIONS PERMIT.

INCREASE RAMP WIDTH, IF NECESSARY, TO ACCOMMODATE SIDEWALK SNOW REMOVAL EQUIPMENT NORMALLY USED BY THE MUNICIPALITY.

REDUCE RAMP WIDTH TO NOT LESS THAN 4' AND LANDINGS TO NOT LESS THAN 4' x 4' WHEN 5' MINIMUM WIDTHS ARE NOT FEASIBLE.

CURB RAMPS WITH A RUNNING SLOPE ≤ 5% DO NOT REQUIRE A TOP LANDING. HOWEVER, FOR ANY CONTINUOUS SIDEWALK OR PEDESTRIAN ROUTE CROSSING THROUGH OR INTERSECTING THE CURB RAMP, INDEPENDENTLY MAINTAIN A CROSS SLOPE NOT GREATER THAN 2.1% PERPENDICULAR TO ITS OWN DIRECTION(S) OF TRAVEL.

ENSURE DETECTABLE WARNING SURFACE COVERS A MINIMUM OF 24" IN THE DIRECTION OF RAMP/PATH TRAVEL AND THE FULL WIDTH OF THE RAMP/PATH OPENING, EXCLUDING CURBED OR FLARED CURB TRANSITION AREAS. IF A BORDER IS DESIRED, OFFSET THE BORDER 2" MAXIMUM ALONG THE EDGES OF THE DETECTABLE WARNING. FOR RADIAL CURB, MEASURE THE OFFSET FROM THE ENDS OF THE RADIUS.

DO NOT EXCEED A RAMP CROSS SLOPE OF 2.1% FOR NEW ROADWAY CONSTRUCTION. FOR ALTERATIONS TO EXISTING ROADWAYS, TRANSITION THE CROSS SLOPE TO MEET AN EXISTING ROADWAY GRADE. APPLY THE CROSS SLOPE TRANSITION UNIFORMLY OVER THE FULL LENGTH OF THE RAMP.

THE MAXIMUM RUNNING SLOPE OF 8.3% IS RELATIVE TO A FLAT (0%) REFERENCE. HOWEVER, NO RAMP OR SERIES OF RAMPS IS REQUIRED TO EXCEED 15 FEET IN LENGTH, NOT INCLUDING LANDINGS OR TRANSITIONS.

DO NOT PLACE DRAINAGE STRUCTURES IN LINE WITH RAMPS. GIVE PRECEDENCE TO THE LOCATION OF THE RAMP, OVER THE LOCATION OF THE DRAINAGE STRUCTURE. WHERE EXISTING DRAINAGE STRUCTURES ARE LOCATED IN THE RAMP PATH OF TRAVEL, USE A MANUFACTURER'S ADA COMPLIANT GRATE. LIMIT OPENINGS TO ½" OR LESS. PLACE ELONGATED OPENINGS SO THAT THE LONG DIMENSION IS PERPENDICULAR TO THE DOMINANT DIRECTION OF TRAVEL.

ENSURE THE TOP OF THE JOINT FILLER (FOR ALL RAMP TYPES) IS FLUSH WITH THE ADJACENT CONCRETE.

LOCATE CROSSWALK AND STOP LINE MARKINGS TO STOP TRAFFIC SHORT OF RAMP CROSSINGS. SEE THE "MICHIGAN MANUAL ON UNIFORM TRAFFIC CONTROL DEVICES" FOR SPECIFIC DETAILS FOR MARKING APPLICATIONS.

PROVIDE FLARED SIDES WITH A MAXIMUM SLOPE OF 10%, MEASURED ALONG THE ROADSIDE CURB LINE, WHERE AN UNOBSTRUCTED CIRCULATION PATH LATERALLY CROSSES THE CURB RAMP. FLARED SIDES ARE NOT REQUIRED WHERE THE RAMP IS BORDERED BY LANDSCAPING, UNPAVED SURFACE OR PERMANENT FIXED OBJECTS. WHERE NOT REQUIRED, CONSIDER FLARED SIDES IN ORDER TO AVOID SHARP CURB RETURNS AT RAMP OPENINGS.

INSTALL DETECTABLE WARNING PLATES USING FABRICATED OR FIELD CUT UNITS CAST AND/OR ANCHORED IN THE PAVEMENT TO RESIST SHIFTING OR HEAVING.

| | | | | |
|---|---|---|---|---|
| MDOT Michigan Department of Transportation<br>DEPARTMENT DIRECTOR<br>BRADLEY C. WIEFERICH, PE | STANDARD PLAN FOR<br>CURB RAMP AND<br>DETECTABLE WARNING DETAILS | | | |
| | 12/18/2024<br>FHWA APPROVAL | 06/21/2024<br>PLAN DATE | R-28-K | SHEET<br>7 OF 7 |

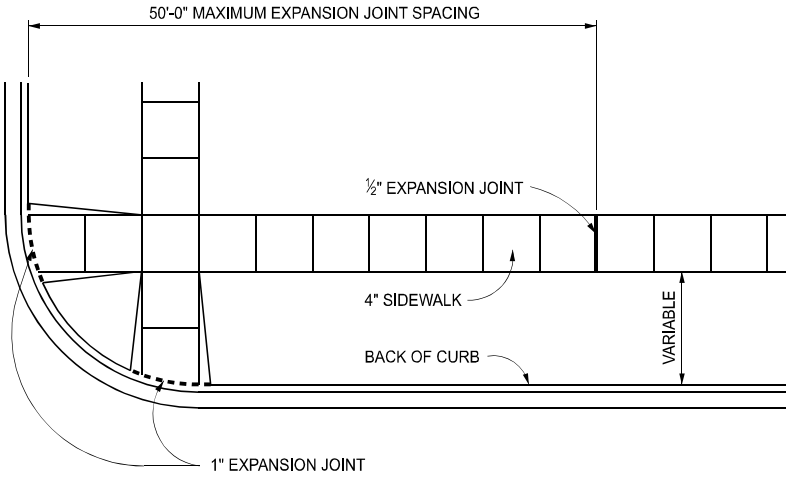


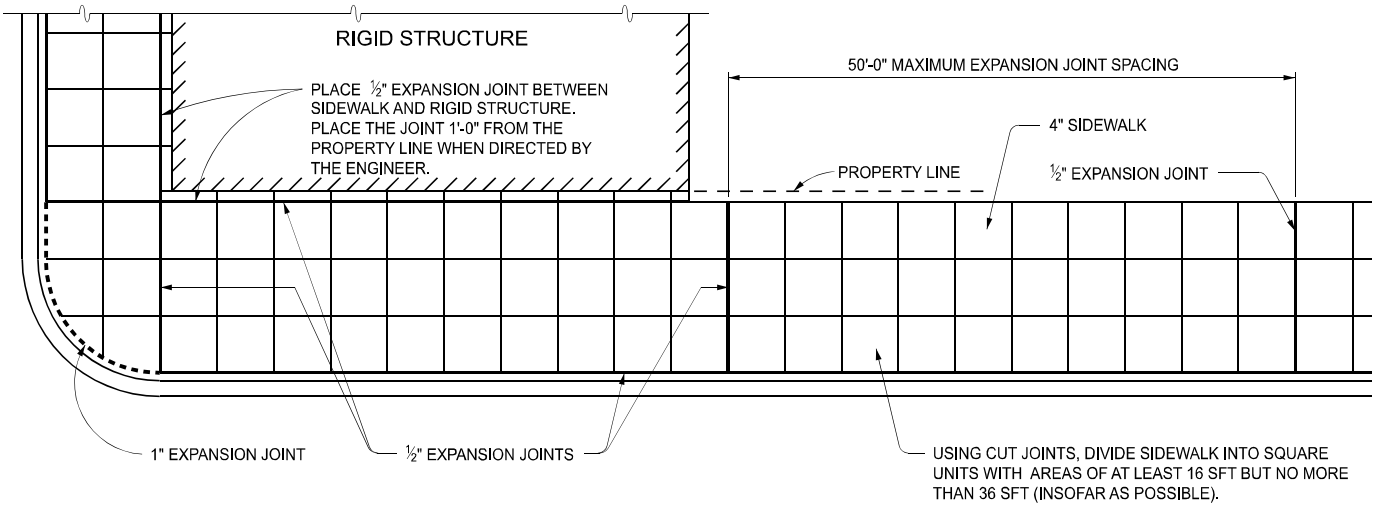


LOCATION OF JOINTS IN CONCRETE SIDEWALK

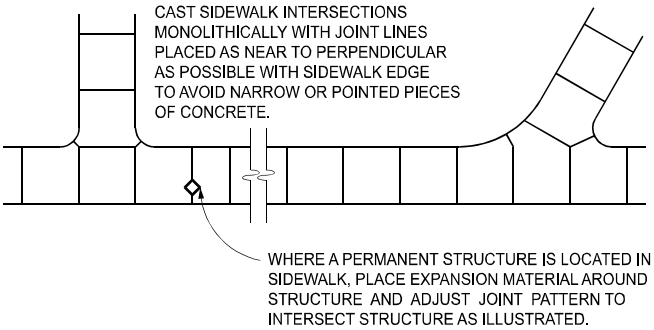


TYPICAL SIDEWALK JOINT LAYOUTS

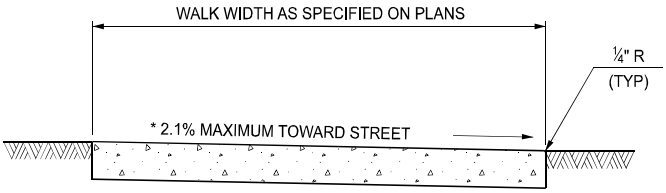


* SEE NOTES

4" CONCRETE SIDEWALK

| | | | |
|---|---|---|---|
| APPROVED BY: E-SIGNED by JASON GUTTING on 2024-09-24 12:55:49 EDT<br>DIRECTOR, BUREAU OF FIELD SERVICES | MDOT Michigan Department of Transportation | STANDARD PLAN FOR<br>DRIVEWAY OPENINGS & APPROACHES, AND CONCRETE SIDEWALK | |
| APPROVED BY: E-SIGNED by Demetrius Parker on 2024-09-24 09:51:28 EDT<br>DIRECTOR, BUREAU OF DEVELOPMENT | DEPARTMENT DIRECTOR<br>BRADLEY C. WIEFERICH, PE | 12/18/2024 FHWA APPROVAL<br>06/12/2024 PLAN DATE | R-29-J | SHEET 1 OF 4 |

NOTE:
W = MINIMUM WIDTH OF THICKENED CONCRETE SIDEWALK.
ENSURE ( R - d ) IS NOT LESS THAN DRIVEWAY WIDTH.

SEE MDOT PUBLICATION "ADMINISTRATIVE RULES REGULATING DRIVEWAYS, BANNERS AND PARADES ON OR OVER HIGHWAYS" FOR THE "R" DIMENSION.

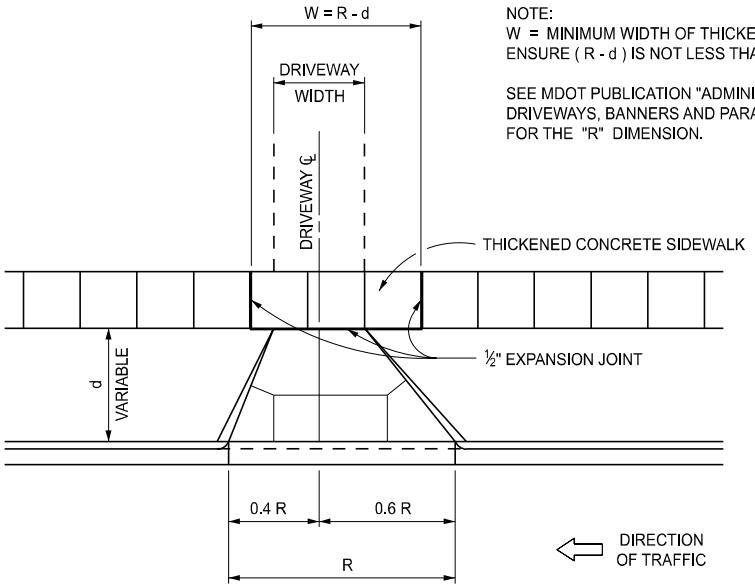


CONCRETE DRIVEWAY OPENING LAYOUT

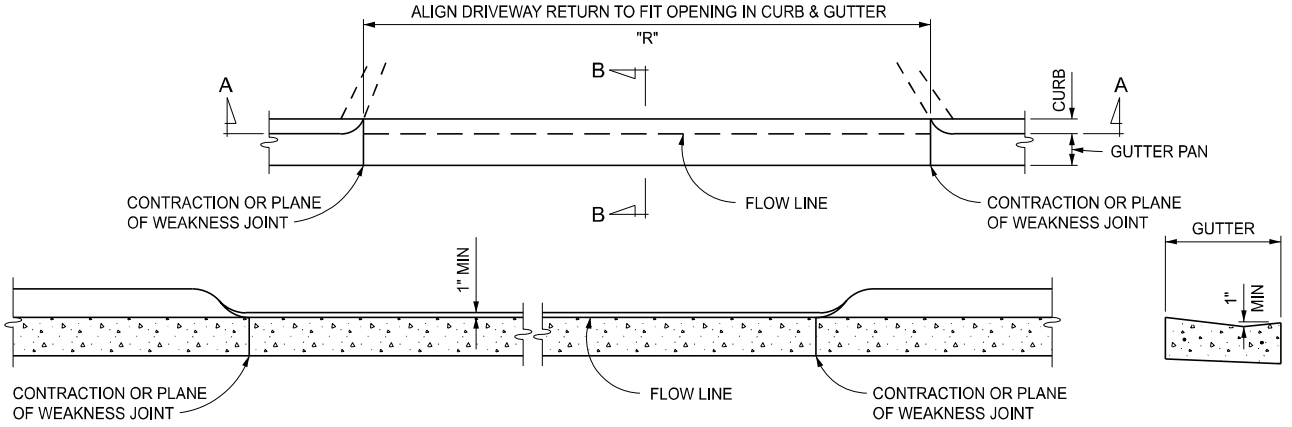


SECTION A - A

SECTION B - B

CONCRETE DRIVEWAY OPENING, DETAIL L

** TO FRONT EDGE OF GUTTER PAN

*** USE "W" JOINT IF THE DRIVEWAY AND CURB ARE POURED MONOLITHICALLY OR SYMBOL "B" JOINT IF THEY ARE POURED IN STAGES.

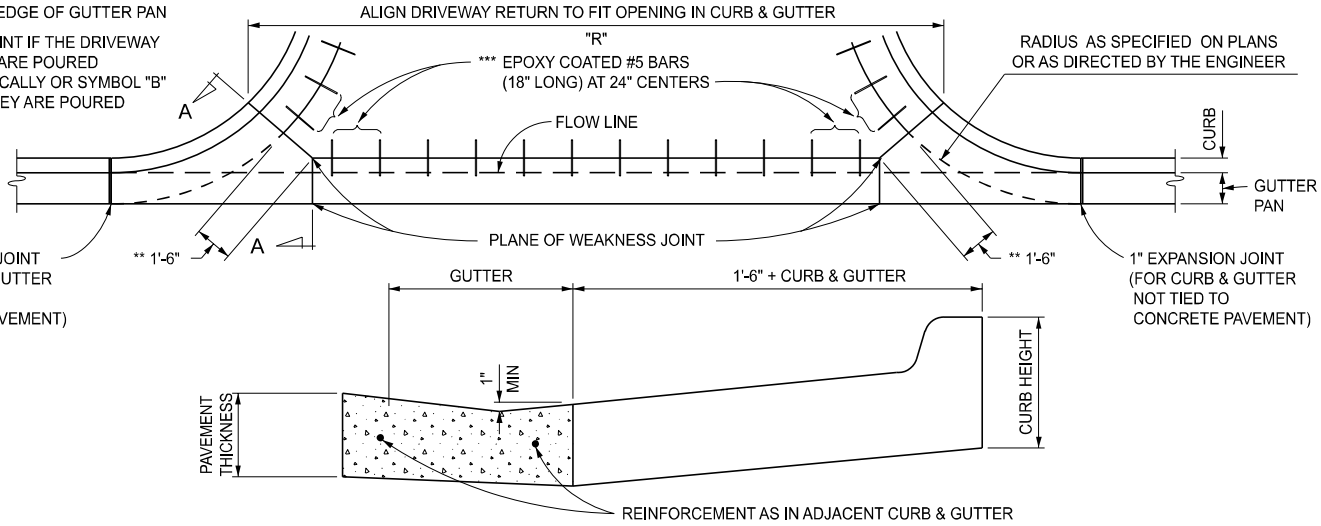


SECTION A - A

CONCRETE DRIVEWAY OPENING, DETAIL M

NOTE:
ENSURE LONGITUDINAL LANE TIES ARE CONTINUOUS THROUGH THE DRIVEWAY OPENING IN ROADWAYS WITH CONCRETE PAVEMENTS AND ADJUST THE SPACING OF THE #5 BARS IN CONCRETE DRIVEWAYS TO AVOID CONFLICT WITH THE LONGITUDINAL LANE TIES.

MDOT
Michigan Department of Transportation

DEPARTMENT DIRECTOR
BRADLEY C. WIEFERICH, PE

STANDARD PLAN FOR
DRIVEWAY OPENINGS & APPROACHES, AND CONCRETE SIDEWALK

| 12/18/2024 | 06/12/2024 | R-29-J | SHEET |
|---|---|---|---|
| FHWA APPROVAL | PLAN DATE | | 2 OF 4 |

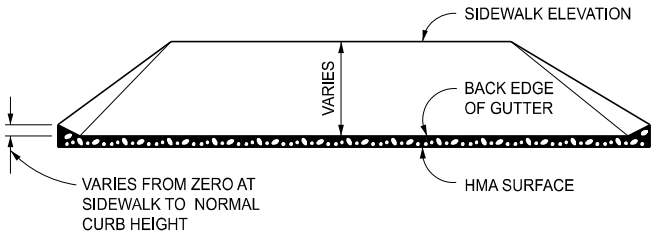


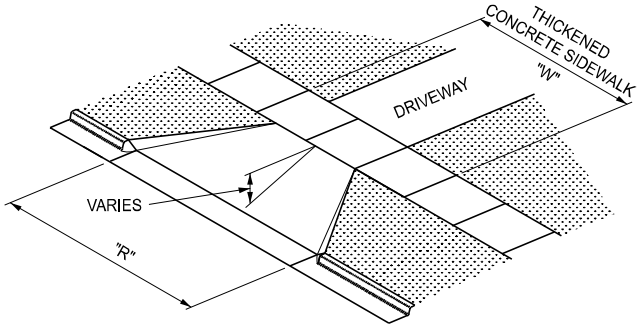


## HMA DRIVEWAY APPROACH

(TO BE USED WITH DETAIL L)

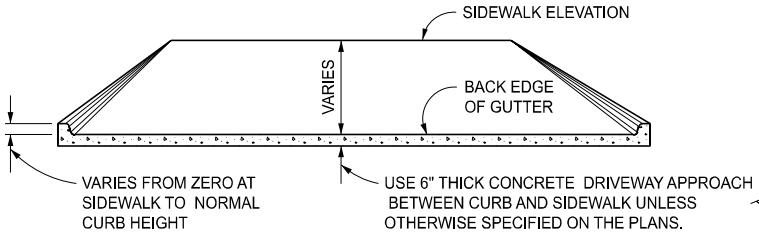


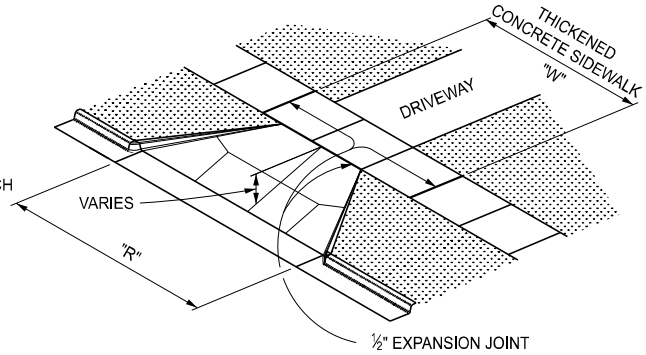


NOTES:
INCLUDE MONOLITHIC CURB IN THE CONCRETE DRIVEWAY APPROACH QUANTITY.

SEE CHART ON THIS SHEET WHEN REINFORCEMENT IS REQUIRED (SPECIFIED ON THE PLANS).

## CONCRETE DRIVEWAY APPROACH

(TO BE USED WITH DETAIL L OR M)

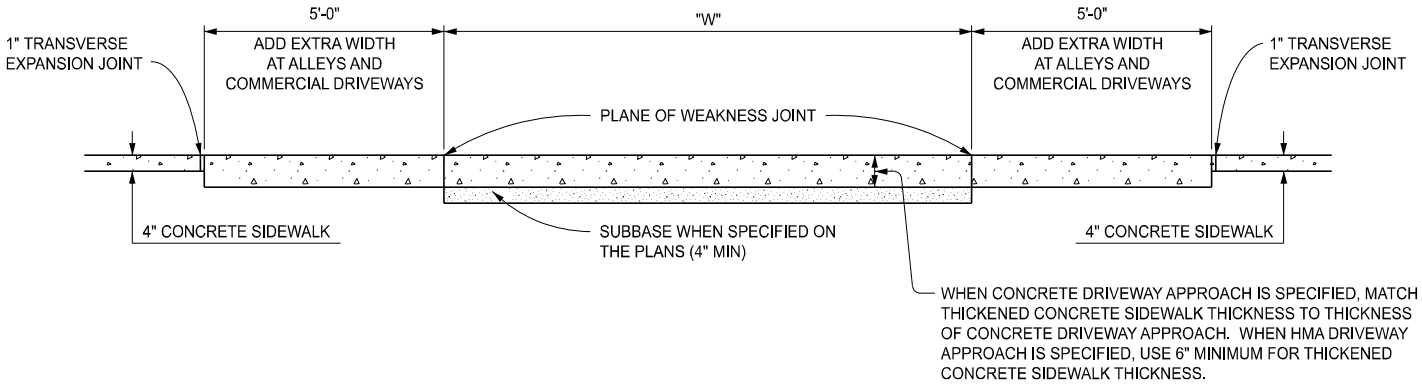


## THICKENED CONCRETE SIDEWALK

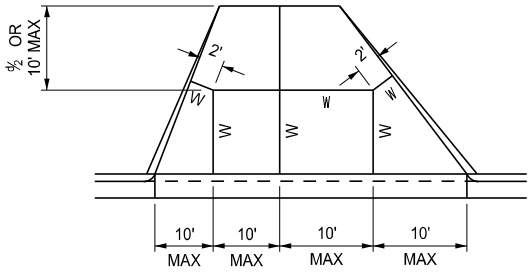


ADJUST DRIVEWAY JOINTS AS NEEDED TO ALIGN WITH ANY COINCIDING TRANSVERSE PAVEMENT JOINTS,

USE JOINT LAYOUT AS INDICATED OR AS DIRECTED BY THE ENGINEER.

## INTERMEDIATE DRIVEWAY JOINT DETAILS

| REINFORCEMENT FOR CONCRETE DRIVEWAYS | | |
|---|---|---|
| CONCRETE DRIVEWAY THICKNESS | WIRE SIZE (6" x 6" MESH) | AVERAGE WEIGHT (LBS/100 SFT) |
| LESS THAN 8" | W1.4 | 21 |
| | W2.9 | 42 |
| 8" OR GREATER | USE WIRE FABRIC REINFORCEMENT SPECIFIED ON STANDARD PLAN R-37-SERIES | |

MDOT
Michigan Department of Transportation

DEPARTMENT DIRECTOR
BRADLEY C. WIEFERICH, PE

STANDARD PLAN FOR
DRIVEWAY OPENINGS & APPROACHES, AND CONCRETE SIDEWALK

| 12/18/2024 | 06/12/2024 | R-29-J | SHEET |
|---|---|---|---|
| FHWA APPROVAL | PLAN DATE | | 3 OF 4 |

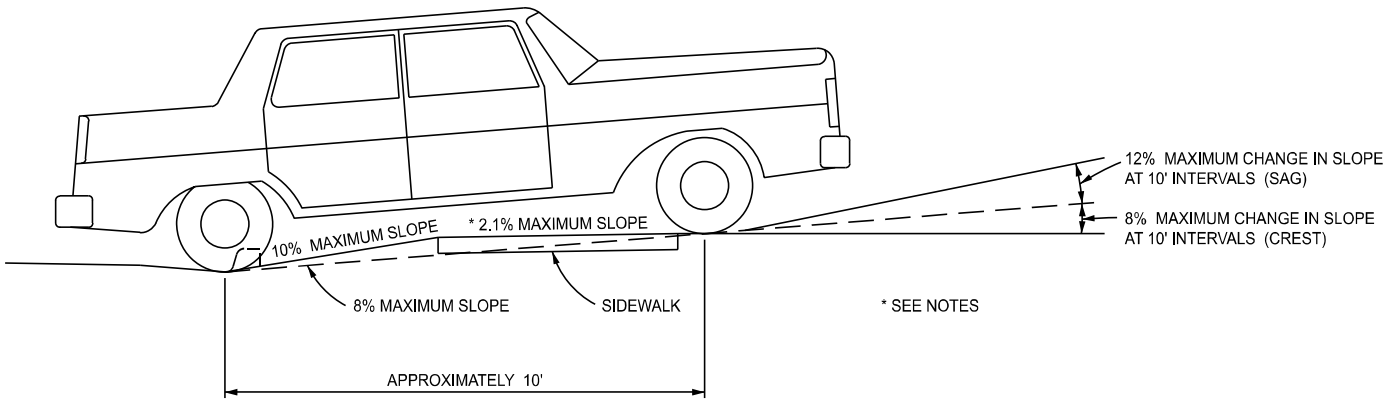


LOW VOLUME COMMERCIAL OR RESIDENTIAL DRIVEWAY SLOPES

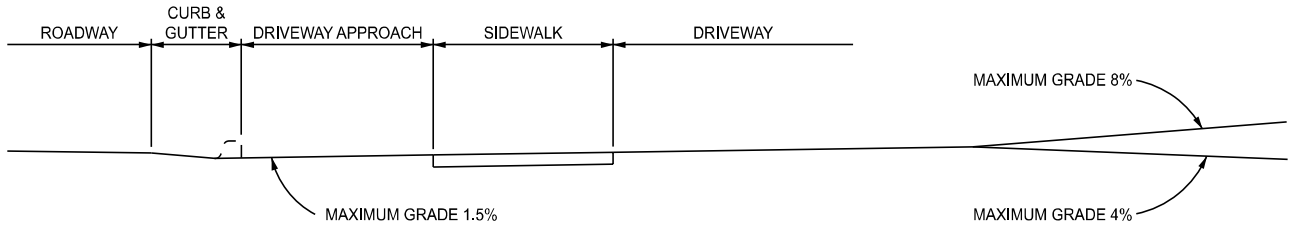


COMMERCIAL DRIVEWAY PROFILE FOR MAJOR TRAFFIC GENERATORS

NOTES:

SEE MDOT PUBLICATION "ADMINISTRATIVE RULES REGULATING DRIVEWAYS, BANNERS, AND PARADES ON OR OVER HIGHWAYS" AND GEOMETRIC DESIGN GUIDE G-680-SERIES, "COMMERCIAL DRIVEWAYS"FOR DRIVEWAY DESIGN.

SEE STANDARD PLAN R-30-SERIES FOR CURB AND GUTTER DETAILS.

LIMIT TRANSVERSE SIDEWALK SLOPES TO 2.1% MAXIMUM. PROVIDE LONGITUDINAL DRAINAGE IF THE TRANSVERSE SLOPE IS REQUIRED TO BE LESS THAN 1.5%.

CONSIDER THE TYPES OF VEHICLES USING THE DRIVE WHEN SETTING GRADES FOR COMMERCIAL DRIVES.

| | | | | |
|---|---|---|---|---|
| MDOT Michigan Department of Transportation | STANDARD PLAN FOR DRIVEWAY OPENINGS & APPROACHES, AND CONCRETE SIDEWALK | | | |
| DEPARTMENT DIRECTOR BRADLEY C. WIEFERICH, PE | 12/18/2024 FHWA APPROVAL | 06/12/2024 PLAN DATE | R-29-J | SHEET 4 OF 4 |

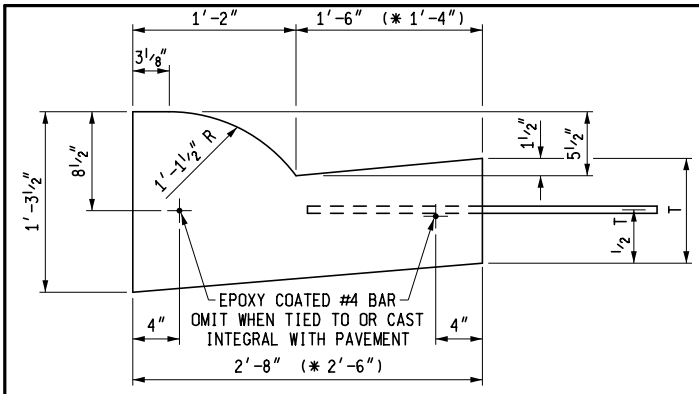


(✱ GUTTER PAN WIDTH MAY BE REDUCED WHEN APPROVED BY THE ENGINEER)

| DETAIL | DIMENSION T | LANE TIES | CONCRETE CYD / LFT | CONCRETE CYD / LFT |
|---|---|---|---|---|
| B1 | 9″ | AS SHOWN | 0.0900 | (✱ 0.0855) |
| B2 | 9″ | OMITTED | 0.0900 | (✱ 0.0855) |
| B3 | 10″ | AS SHOWN | 0.0941 | (✱ 0.0894) |

B

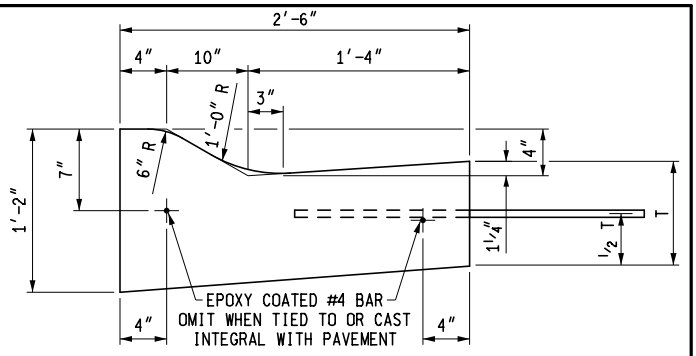


| DETAIL | DIMENSION T | LANE TIES | CONCRETE CYD / LFT |
|---|---|---|---|
| D1 | 9″ | AS SHOWN | 0.0788 |
| D2 | 9″ | OMITTED | 0.0788 |
| D3 | 10″ | AS SHOWN | 0.0826 |

D

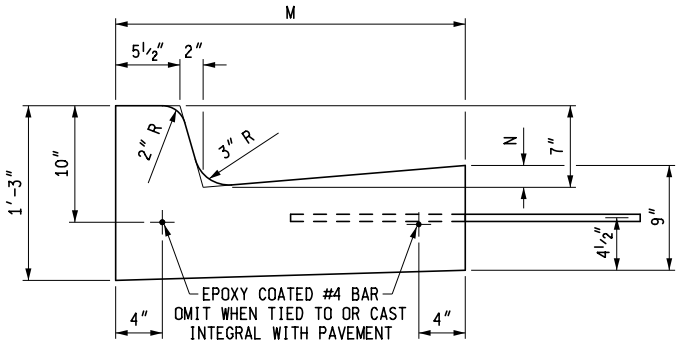


| DETAIL | DIMENSION M | DIMENSION N | LANE TIES | CONCRETE CYD / LFT |
|---|---|---|---|---|
| C1 | 1′-6″ | 7/8″ | AS SHOWN | 0.0506 |
| C2 | 1′-6″ | 7/8″ | OMITTED | 0.0506 |
| C3 | 2′-0″ | 1 3/8″ | AS SHOWN | 0.0632 |
| C4 | 2′-0″ | 1 3/8″ | OMITTED | 0.0632 |
| C5 | 2′-6″ | 1 7/8″ | AS SHOWN | 0.0757 |
| C6 | 2′-6″ | 1 7/8″ | OMITTED | 0.0757 |

C

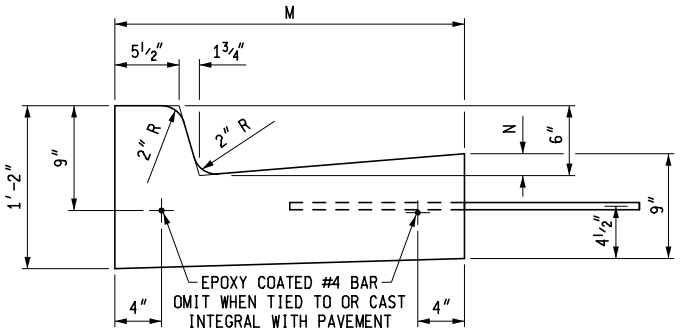


| DETAIL | DIMENSION M | DIMENSION N | LANE TIES | CONCRETE CYD / LFT |
|---|---|---|---|---|
| F1 | 1′-6″ | 7/8″ | AS SHOWN | 0.0484 |
| F2 | 1′-6″ | 7/8″ | OMITTED | 0.0484 |
| F3 | 2′-0″ | 1 3/8″ | AS SHOWN | 0.0610 |
| F4 | 2′-0″ | 1 3/8″ | OMITTED | 0.0610 |
| F5 | 2′-6″ | 1 7/8″ | AS SHOWN | 0.0737 |
| F6 | 2′-6″ | 1 7/8″ | OMITTED | 0.0737 |

F

✱ WHEN OTHER THAN 7″ (4″ MIN. TO 9″ MAX.) FACE EXPOSURE IS SPECIFIED ON PLANS, VARY TOTAL CURB HEIGHT AND BATTER ACCORDINGLY

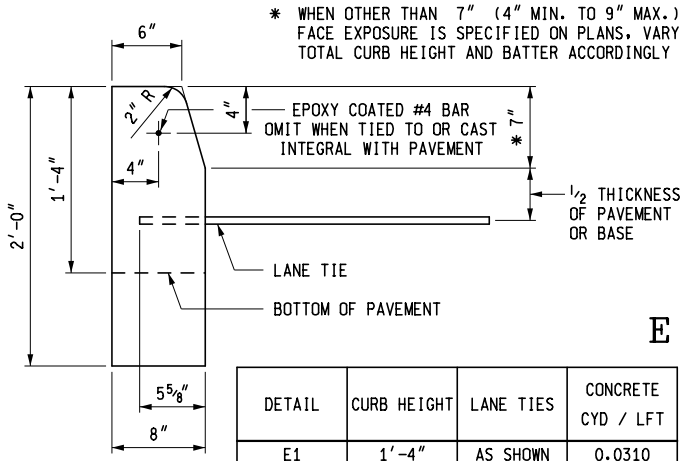


E

| DETAIL | CURB HEIGHT | LANE TIES | CONCRETE CYD / LFT |
|---|---|---|---|
| E1 | 1′-4″ | AS SHOWN | 0.0310 |
| E2 | 1′-4″ | OMITTED | 0.0310 |
| E4 | 2′-0″ | OMITTED | 0.0477 |

MDOT Michigan Department of Transportation

PREPARED BY DESIGN DIVISION

DRAWN BY: B.L.T.

CHECKED BY: W.K.P.

DEPARTMENT DIRECTOR
Kirk T. Steudle

APPROVED BY: Randy Van Portfleet
DIRECTOR, BUREAU OF FIELD SERVICES

APPROVED BY: Mark A Van Port Fleet
DIRECTOR, BUREAU OF HIGHWAY DEVELOPMENT

MICHIGAN DEPARTMENT OF TRANSPORTATION
BUREAU OF HIGHWAY DEVELOPMENT STANDARD PLAN FOR

# CONCRETE CURB AND CONCRETE CURB & GUTTER

| 9-30-2014 | 2-6-2014 | R-30-G | SHEET |
|---|---|---|---|
| F.H.W.A. APPROVAL | PLAN DATE | | 1 OF 2 |

NOTES:

TRANSVERSE JOINT SPACING IN CONCRETE PAVEMENT AND CONCRETE SHOULDERS SHALL BE AS SPECIFIED IN THE PROPOSAL OR ON THE PLANS AND CONSTRUCTED ACCORDING TO STANDARD PLAN R-43-SERIES AND THIS PLAN, OR AS DIRECTED BY THE ENGINEER. THE PLACEMENT OF JOINTS IN CURB, CURB AND GUTTER OR VALLEY GUTTER SHALL BE PLACED AS SPECIFIED ON STANDARD PLAN R-30-SERIES AND R-33-SERIES. PAVEMENTS NOT CAST INTEGRALLY WITH CURB, CURB AND GUTTER, VALLEY GUTTER OR CONCRETE SHOULDER SHALL BE CONNECTED WITH A LONGITUDINAL SYMBOL (B) JOINT.

JOINTS SHALL BE CONSTRUCTED ACCORDING TO CURRENT STANDARD PLANS R-39-SERIES AND R-41-SERIES.

RAMP JOINTS SHALL BE ORIENTED 90 DEGREES TO THE ALIGNMENT EDGE OF THE RAMP UNTIL THE 2' POINT OF THE GORE. THEN, AS THE RAMP MERGES WITH THE MAINLINE, THE JOINTS SHALL BE ALIGNED 90 DEGREES TO THE MAINLINE.

BASE COURSES SHALL BE NONREINFORCED UNLESS OTHERWISE SPECIFIED ON THE PLANS.

THE LOCATION OF SYMBOLS (E2), (E3) OR (Cp) JOINTS SHALL BE ADJUSTED TO AVOID CONFLICTS WITH MANHOLES, CATCH BASINS, MONUMENT BOXES, WATER SHUT-OFFS, OR OTHER RIGID STRUCTURES. EITHER THE JOINT SHALL BE LOCATED TO INTERSECT AT THE MID POINT OF THE STRUCTURE OR THE STRUCTURE SHALL BE LOCATED IN THE CENTER OF THE PAVEMENT SLAB. SEE R-37-SERIES FOR ISOLATION JOINT DETAILS.

THE CONCRETE PAVEMENT IN THE TRUCK AND PASSENGER CAR PARKING AREAS OF REST AREAS SHALL BE TEXTURED ACCORDING TO THE CURRENT STANDARD SPECIFICATIONS FOR CONSTRUCTION.

MICHIGAN DEPARTMENT OF TRANSPORTATION
BUREAU OF HIGHWAY DEVELOPMENT STANDARD PLAN FOR

# TYPICAL JOINT LAYOUTS FOR CONCRETE PAVEMENT

| 1-25-2013 | 12-6-2010 | R-42-F | SHEET |
|---|---|---|---|
| F.H.W.A. APPROVAL | PLAN DATE | | 6 OF 6 |

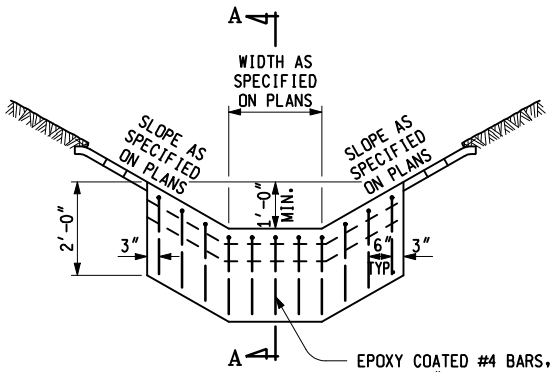


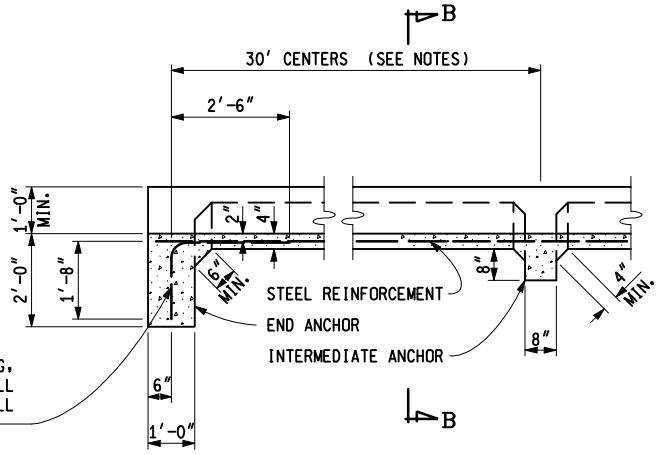


SECTION A - A

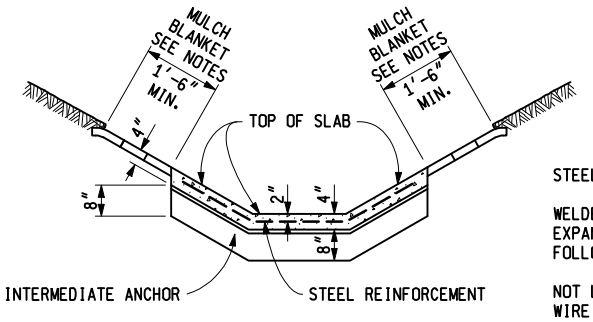


SECTION B - B

TWO PLANE OF WEAKNESS JOINTS EQUALLY SPACED SHALL BE PLACED BETWEEN ANCHORS AND SHALL BE CONSTRUCTED ACCORDING TO THE CURRENT STANDARD SPECIFICATIONS

STEEL REINFORCEMENT

WELDED STEEL WIRE FABRIC OR AN EQUIVALENT EXPANDED METAL MESH CONFORMING TO THE FOLLOWING MINIMUM REQUIREMENTS:

NOT LESS THAN 3.69 LBS PER SYD UNIFORM WIRE FABRIC COMPOSED OF W6 (NOMINAL DIA. 0.276") 6" ON CENTER LONGITUDINALLY AND TRANSVERSELY.

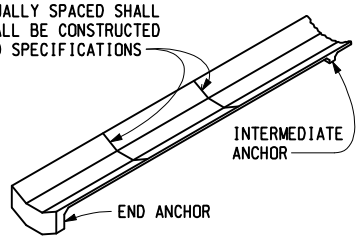


## CONCRETE PAVED DITCH

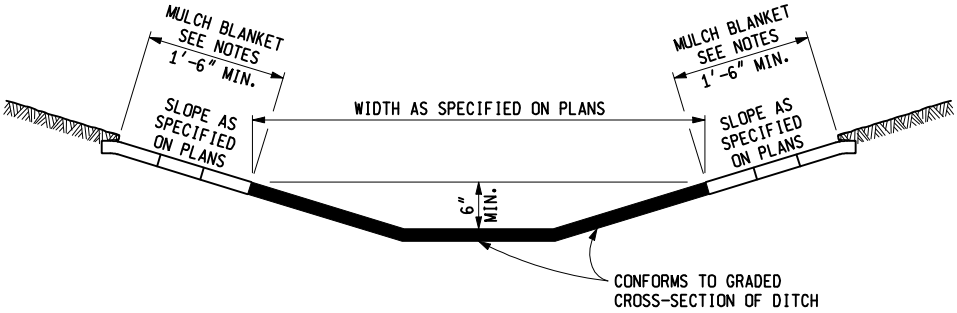


THE RATE OF APPLICATION FOR THE HMA MATERIAL SHALL BE ACCORDING TO THE CURRENT STANDARD SPECIFICATIONS

## HMA PAVED DITCH

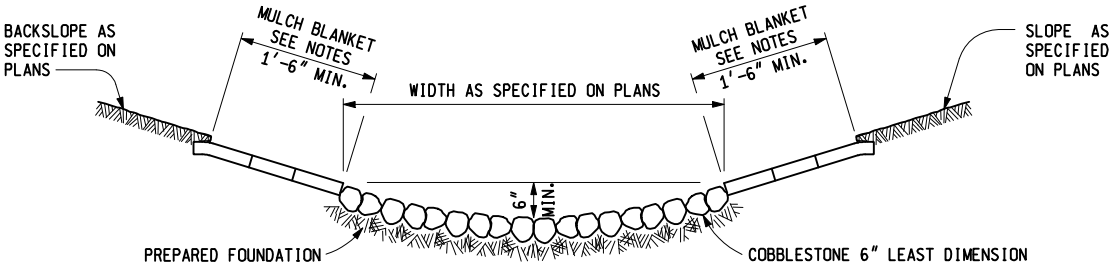


## PLAIN COBBLE DITCH
## GROUTED COBBLE DITCH

GROUTED COBBLE DITCHES SHALL BE THE SAME AS THE PLAIN COBBLE DITCHES, EXCEPT THE COBBLESTONES SHALL BE LAID IN A LAYER OF CEMENT MORTAR ACCORDING TO THE CURRENT STANDARD SPECIFICATIONS.

MDOT Michigan Department of Transportation

PREPARED BY DESIGN DIVISION

DRAWN BY: B.L.T.

CHECKED BY: W.K.P.

DEPARTMENT DIRECTOR
Kirk T. Steudle

APPROVED BY: John C. Friend
ENGINEER OF DELIVERY

APPROVED BY: Mark A. Van Port Fleet
ENGINEER OF DEVELOPMENT

MICHIGAN DEPARTMENT OF TRANSPORTATION
BUREAU OF HIGHWAY DEVELOPMENT STANDARD PLAN FOR

# PAVED AND COBBLE DITCHES, & DRAINAGE TREATMENT DETAILS

| 9-10-2010 | 4-6-2010 | R-46-D | SHEET |
|---|---|---|---|
| F.H.W.A. APPROVAL | PLAN DATE | | 1 OF 2 |

NOTES:

WHEN "CONCRETE BARRIER, DOUBLE FACE, TYPE A" IS DESIGNATED ON THE PLANS, THE BARRIER MAY BE CONSTRUCTED USING DOWELS AND A WIDENED BASE AS SPECIFIED FOR THE "CONCRETE BARRIER, DOUBLE FACE, TYPE B". THE DOWELS, EXTRA WIDTH OF BASE, OR ANY EXTRA WORK REQUIRED WILL BE INCLUDED IN THE PAY ITEM "CONC BARRIER, DOUBLE FACE, TYPE A".

WHEN "CONCRETE BARRIER, DOUBLE FACE, TYPE B" IS DESIGNATED ON THE PLANS, THE BARRIER SHALL BE CONSTRUCTED ON AN EXISTING BASE OR SHOULDER AND DOWELED WITH EPOXY COATED #6 DEFORMED BARS 1'-3" LONG. DOWEL PLACEMENT SHALL START 1'-6" FROM END OF STANDARD SECTION. DOWELS SHALL BE PLACED EVERY 3'-0" ALONG THE BARRIER ALTERNATING FROM SIDE TO SIDE (6'-0" C-C ALONG EACH SIDE). DOWELS ARE INCLUDED IN THE PAY ITEM "CONC BARRIER, DOUBLE FACE, TYPE B". ON SPLIT SECTIONS, DOWELS SHALL BE PLACED 3'-0" C-C ALONG EACH SIDE OF THE BARRIER. SPACING MAY BE ADJUSTED TO AVOID CONFLICT WITH JOINTS. DOWELS ARE INCLUDED IN THE PAY ITEM "CONC BARRIER, DOUBLE FACE, TYPE B". THE BASE FOR "CONCRETE BARRIER, DOUBLE FACE, TYPE B" WILL BE PAID FOR SEPARATELY (FOR EXAMPLE: AS CONCRETE SHOULDER, CONCRETE BASE COURSE, ETC.).

THE TAPERED SECTIONS AT THE BEGINNING AND END OF CONCRETE BARRIER, SPLIT ARE INCLUDED IN THE PAY ITEM "CONC BARRIER, SPLIT, TYPE __".

THE TOP AND FACES OF THE BARRIER SHALL NOT VARY MORE THAN 1/2" IN 10' WHEN CHECKED WITH A 10' STRAIGHTEDGE, EXCEPT AT GRADE CHANGES AND CURVES, AND SHALL BE FREE OF HUMPS, SAGS, AND OTHER IRREGULARITIES.

THE CONCRETE FILLER SLAB SHALL BE PAID FOR AS "SIDEWALK, CONC, 4 INCH". THE 1/4" FIBER JOINT FILLER SHALL BE INCLUDED IN THE PAY ITEM "SIDEWALK, CONC, 4 INCH".

THE CLASS II GRANULAR MATERIAL USED IN FILLING SPLIT BARRIER SECTIONS WILL BE PAID FOR AS "CONC BARRIER BACKFILL, CIP".

PLACE 1" EXPANSION JOINTS AT 400' INTERVALS IN BOTH TYPE A AND TYPE B BARRIERS. ALSO PLACE 1" EXPANSION JOINTS AT SPLIT SECTIONS AND ON BOTH ENDS OF ALL STRUCTURES (INCLUDING SIGN SUPPORT FOUNDATIONS, LIGHT STANDARD FOUNDATIONS, BRIDGE PIERS, OR ANY STRUCTURE WITH A FOUNDATION). PLACE 1" EXPANSION JOINTS IN 4" CONCRETE FILLER SLAB, ALIGNED WITH EXPANSION JOINTS IN BARRIER.

PLANE OF WEAKNESS JOINT SPACING SHALL BE 20'-0" MAXIMUM AND 10'-0" MINIMUM. PLANE OF WEAKNESS JOINTS IN THE BARRIER SHALL BE TO A DEPTH OF AT LEAST 4" AND SHALL BE EDGED.

BARRIER SHALL BE ENDED SO AS NOT TO PRESENT A HAZARD TO APPROACHING TRAFFIC, SUCH AS BY CURVING IT AWAY FROM A TARGET POSITION BEYOND THE CLEAR ZONE, BY ENDING AT A STRUCTURE, OR BY UTILIZING AN IMPACT ATTENUATION DEVICE.

FOR VALLEY GUTTER DETAILS, SEE STANDARD PLAN R-33-SERIES.

E5 LONGITUDINAL JOINT WILL NOT BE PAID FOR SEPARATELY BUT SHALL BE INCLUDED IN THE PAYMENT FOR THE VALLEY GUTTER OR SHOULDER WHICH IS ADJACENT TO THE BARRIER WALL OR THE BASE FOR THE CONCRETE BARRIER.

BARRIER REFLECTOR MARKERS ARE TO BE SPACED AT THE FOLLOWING INTERVALS:

1) 50'-0" ON TANGENT SECTIONS AND CURVES WITH A RADIUS OF 1150' OR MORE.

2) 25'-0" ON CURVES WITH A RADIUS LESS THAN 1150'.

BARRIER REFLECTOR MARKERS SHALL MATCH COLOR OF EDGE LINE.

MICHIGAN DEPARTMENT OF TRANSPORTATION
BUREAU OF DEVELOPMENT STANDARD PLAN FOR

# CONCRETE BARRIER

| 3-29-2018 | 2-24-2017 | R-49-G | SHEET |
|---|---|---|---|
| F.H.W.A. APPROVAL | PLAN DATE | | 9 OF 9 |

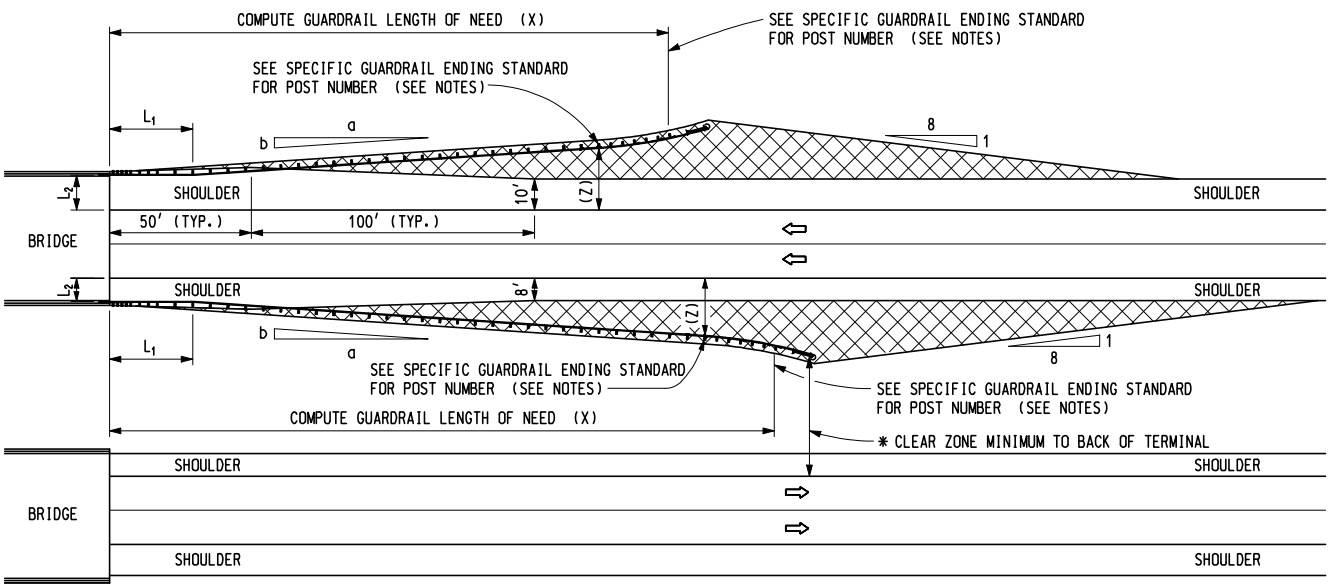


* WHERE CLEAR ZONE DISTANCE CAN NOT BE MET BY USING THE FLARE RATE (1:15), INVESTIGATE IN THE FOLLOWING ORDER OF PREFERENCE THE TREATMENTS LISTED BELOW:

1. USE BULLNOSE WITHIN THE LIMITS SPECIFIED ON STANDARD PLAN R-56-SERIES.
2. INSTALL GUARDRAIL WITH LESS FLARE RATE AS DETERMINED BY BACKSIDE MINIMUM CLEAR ZONE.

## BEAM GUARDRAIL AT BRIDGES - DUAL ROADWAYS

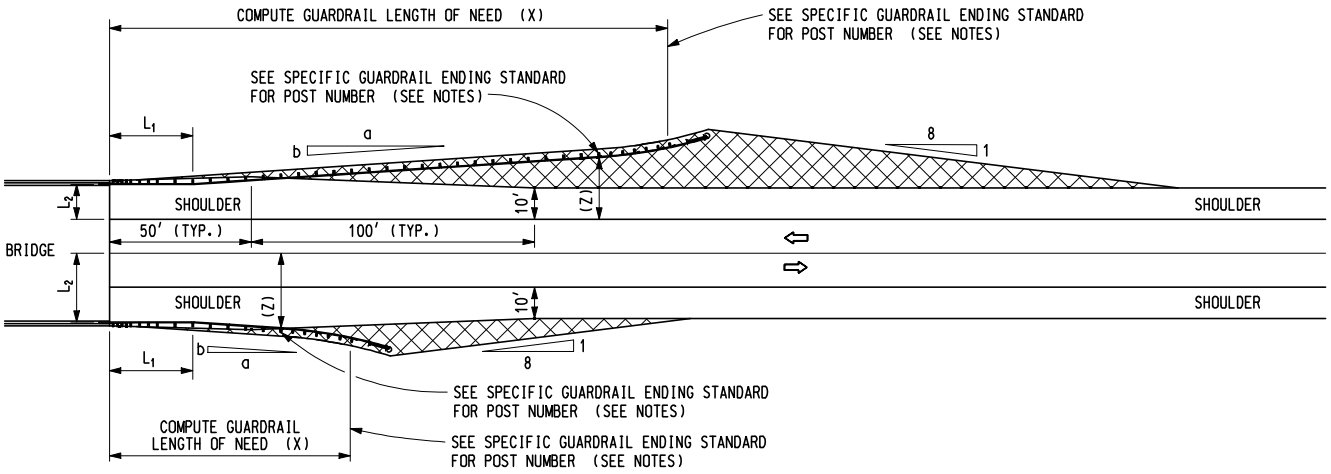


## BEAM GUARDRAIL AT BRIDGES - TWO-WAY ROADWAYS

**LEGEND**

1:10 SLOPE BETWEEN SHOULDER LINE AND 2'-0" BEHIND FACE OF POST.

$L_1$ = TANGENT LENGTH OF BARRIER UPSTREAM FROM THE HAZARD. (25' MIN.)

$L_2$ & Z = LATERAL DISTANCES MEASURED FROM FACE OF GUARDRAIL. (AS SHOWN)

| | | | |
|---|---|---|---|
| MDOT Michigan Department of Transportation | ENGINEER OF CONSTRUCTION & TECHNOLOGY | ENGINEER OF DESIGN SUPPORT AREA | MICHIGAN DEPARTMENT OF TRANSPORTATION<br>BUREAU OF HIGHWAY DEVELOPMENT STANDARD PLAN FOR<br>GUARDRAIL AT BRIDGES AND EMBANKMENTS |
| PREPARED BY DESIGN SUPPORT AREA | ENGINEER OF MAINTENANCE | DEPARTMENT DIRECTOR Gloria J. Jeff | |
| DRAWN BY: B.L.T. | ENGINEER OF TRAFFIC AND SAFETY | ENGINEER OF DEVELOPMENT | |
| CHECKED BY: W.K.P. | | | |

| 11-14-2003 | 5-17-2002 | R-59-E | SHEET |
|---|---|---|---|
| F.H.W.A. APPROVAL | PLAN DATE | | 1 OF 6 |

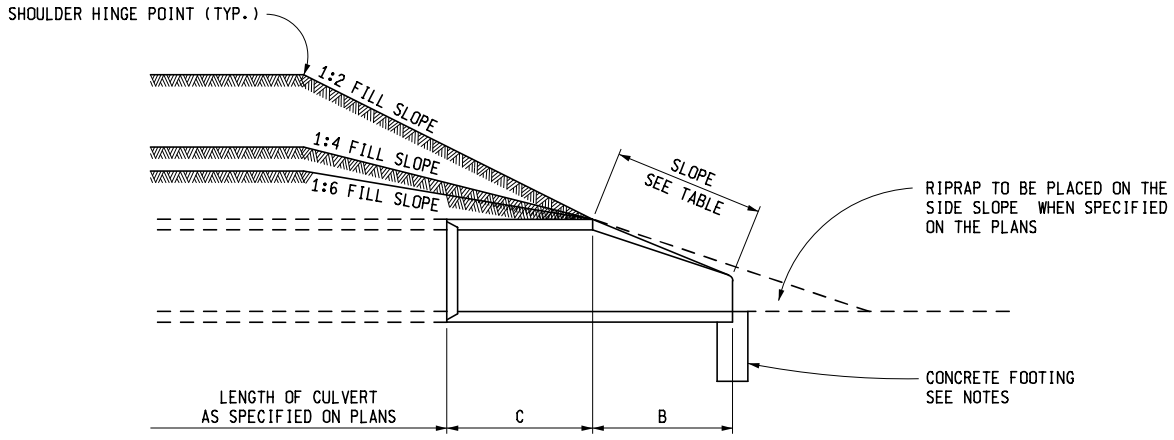


## SLOPE DETAIL

### TABLE OF DIMENSIONS

| PIPE DIAMETER (INCHES) | APPROX. SLOPE | T (INCHES) | A (INCHES) | B (INCHES) | C (INCHES) | D (INCHES) | E (INCHES) | G (INCHES) | R (INCHES) | X (INCHES) | Y (INCHES) |
|---|---|---|---|---|---|---|---|---|---|---|---|
| 12 | 2.4 to 1 | 2 | 4 | 24 | 49 | 73 | 24 | 2 | 9 | 8 | 18 |
| 15 | 2.4 to 1 | 2 1/4 | 6 | 27 | 46 | 73 | 30 | 2 1/4 | 11 | 8 | 18 |
| 18 | 2.3 to 1 | 2 1/2 | 9 | 27 | 46 | 73 | 36 | 2 1/2 | 12 | 8 | 18 |
| 21 | 2.4 to 1 | 2 3/4 | 9 | 36 | 37 1/2 | 73 1/2 | 42 | 2 3/4 | 13 | 8 | 18 |
| 24 | 2.5 to 1 | 3 | 9 1/2 | 43 1/4 | 30 1/2 | 73 3/4 | 48 | 3 | 14 | 8 | 18 |
| 27 | 2.5 to 1 | 3 1/4 | 10 1/2 | 49 1/4 | 24 1/2 | 73 3/4 | 54 | 3 1/4 | 14 1/2 | 8 | 18 |
| 30 | 2.5 to 1 | 3 1/2 | 12 | 54 | 19 3/4 | 73 3/4 | 60 | 3 1/2 | 15 | 8 | 18 |
| 36 | 2.5 to 1 | 4 | 15 | 63 | 34 3/4 | 97 3/4 | 72 | 4 | 20 | 8 | 18 |
| 42 | 2.5 to 1 | 4 1/2 | 21 | 63 | 35 | 98 | 78 | 4 1/2 | 22 | 10 | 24 |
| 48 | 2.5 to 1 | 5 | 24 | 72 | 26 | 98 | 84 | 5 | 22 | 10 | 24 |
| 54 | 2.0 to 1 | 5 1/2 | 27 | 65 | 33 1/4 | 98 1/4 | 90 | 5 1/2 | 24 | 10 | 24 |
| 60 | 1.9 to 1 | 6 | 35 | 60 | 39 | 99 | 96 | 5 | * | 12 | 24 |
| 66 | 1.7 to 1 | 6 1/2 | 30 | 72 | 27 | 99 | 102 | 5 1/2 | * | 12 | 24 |
| 72 | 1.8 to 1 | 7 | 36 | 78 | 21 | 99 | 108 | 6 | * | 12 | 24 |
| 78 | 1.8 to 1 | 7 1/2 | 36 | 90 | 21 | 111 | 114 | 6 1/2 | * | 12 | 24 |
| 84 | 1.6 to 1 | 8 | 36 | 90 1/2 | 21 | 111 1/2 | 120 | 6 1/2 | * | 12 | 24 |

* AS FURNISHED BY THE MANUFACTURER

NOTES:

CONCRETE IN THESE END SECTIONS SHALL BE THE SAME GRADE AND STRENGTH AS SPECIFIED FOR REINFORCED CONCRETE PIPE, A.S.T.M. DESIGNATION C 76 CLASS II, EXCEPT AS MODIFIED BY THE STANDARD SPECIFICATION.

REINFORCEMENT IN THE "C" PORTION SHALL BE THE SAME AS SPECIFIED FOR REINFORCED CONCRETE, A.S.T.M. DESIGNATION C 76 CLASS II FOR THE SIZE OF CONNECTING PIPE.

REINFORCEMENT IN THE "B" PORTION SHALL HAVE A CROSS-SECTIONAL AREA EQUAL TO THAT OF ONE LAYER OF STEEL IN THE "C" PORTION.

THE END OF THE PIPE CULVERT SHALL BE PLACED IN THE CONCRETE END SECTION SO THAT THE FLOW LINES ARE FLUSH. THE JOINT MUST BE COMPLETELY FILLED WITH MORTAR ON THE INSIDE AND OUTSIDE AND STRUCK FLUSH. THE JOINT MUST BE WRAPPED WITH GEOTEXTILE BLANKET 36" WIDE WITH A 12" OVERLAP.

TO CHANGE THE FILL SLOPE TO THE SLOPE OF THE END SECTION USE A TRANSITION SLOPE OF APPROXIMATELY 10' IN LENGTH TO PROVIDE A PLEASING APPEARANCE.

VARIATIONS IN DIMENSIONS - THE THICKNESS OF CONCRETE, THE POSITION OF STEEL, AND THE INTERNAL DIAMETER OF THE PIPE SHALL CONFORM WITH THE VARIATIONS IN DIMENSIONS AS PROVIDED IN THE SPECIFICATIONS FOR REINFORCED CONCRETE CULVERT, STORM DRAINS, AND SEWER PIPE, A.S.T.M. DESIGNATION C 76.

PLACE CONCRETE FOOTING AS SHOWN.

OUTFALL LABEL TO BE USED ONLY WHERE STORMWATER WILL DISCHARGE DIRECTLY TO THE WATERS OF THE STATE.

MICHIGAN DEPARTMENT OF TRANSPORTATION
BUREAU OF DEVELOPMENT STANDARD PLAN FOR

# PRECAST CONCRETE END SECTION FOR PIPE CULVERT

| 5-18-2020 F.H.W.A. APPROVAL | 9-13-2018 PLAN DATE | R-86-F | SHEET 2 OF 2 |
|---|---|---|---|

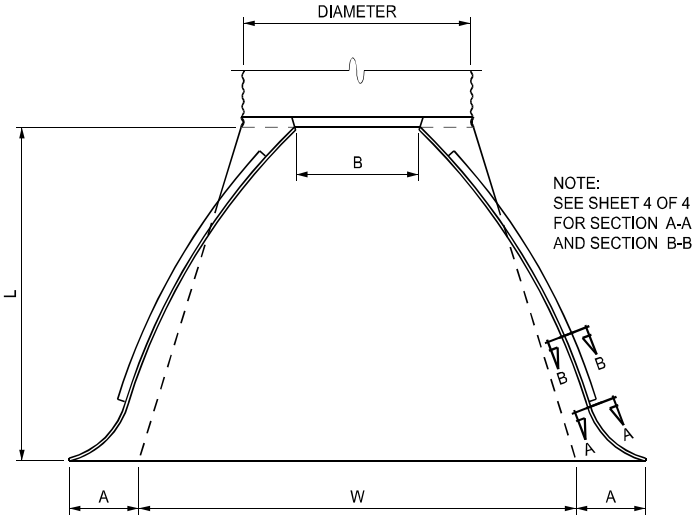


PLAN VIEW

| DIMENSIONS | | | | | | | | |
|---|---|---|---|---|---|---|---|---|
| DIMENSIONS IN INCHES | | | | | | | APPROX SLOPE | BODY |
| PIPE DIAMETER | MIN. THK. | A ± 1" | B MAX. | H ± 1" | L ± 1½" | W ± 2" | | |
| 12 | 0.064 | 6 | 6 | 6 | 21 | 24 | 2.50 | 1 Pc |
| 15 | 0.064 | 7 | 8 | 6 | 26 | 30 | 2.50 | 1 Pc |
| 18 | 0.064 | 8 | 10 | 6 | 31 | 36 | 2.50 | 1 Pc |
| 21 | 0.064 | 9 | 12 | 6 | 36 | 42 | 2.50 | 1 Pc |
| 24 | 0.064 | 10 | 13 | 6 | 41 | 48 | 2.50 | 1 Pc |
| 30 | 0.079 | 12 | 16 | 8 | 51 | 60 | 2.50 | 1 Pc |
| 36 | 0.079 | 14 | 19 | 9 | 60 | 72 | 2.50 | 2 Pc |
| 42 | 0.109 | 16 | 22 | 11 | 69 | 84 | 2.50 | 2 Pc |
| 48 | 0.109 | 18 | 27 | 12 | 78 | 90 | 2.25 | 2 Pc |
| 54 | 0.109 | 18 | 30 | 12 | 84 | 102 | 2.00 | 2 Pc |
| * 60 | 0.109 | 18 | 33 | 12 | 87 | 114 | 1.75 | 3 Pc |
| * 66 | 0.109 | 18 | 36 | 12 | 87 | 120 | 1.50 | 3 Pc |
| * 72 | 0.109 | 18 | 39 | 12 | 87 | 126 | 1.33 | 3 Pc |
| * 78 | 0.109 | 18 | 42 | 12 | 87 | 132 | 1.25 | 3 Pc |
| * 84 | 0.109 | 18 | 45 | 12 | 87 | 138 | 1.16 | 3 Pc |

* ALL THREE PIECE BODIES HAVE 0.109" SIDES AND 0.138" CENTER PANELS. ENSURE THE WIDTH OF CENTER PANEL IS GREATER THAN 20% OF THE PIPE PERIPHERY. TIGHTLY JOIN MULTIPLE PANEL BODIES AT LAP SEAMS USING ⅜" DIAMETER GALVANIZED RIVETS OR BOLTS.

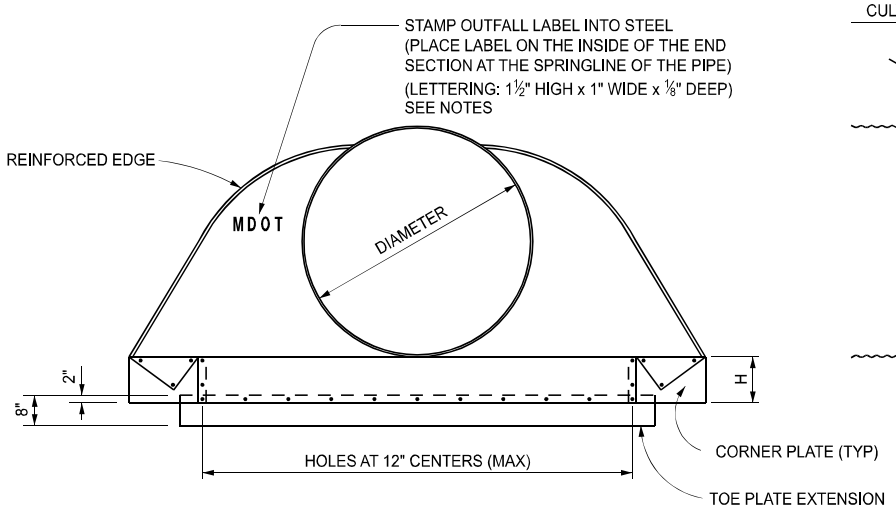


END VIEW

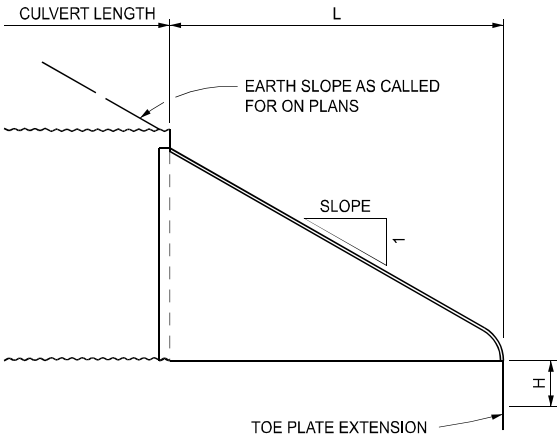


LONGITUDINAL VIEW

NOTE: SEE SHEET 3 FOR CONNECTION DETAILS

# STEEL END SECTION FOR CORRUGATED STEEL CIRCULAR PIPE

APPROVED BY: E-SIGNED by JASON GUTTING on 2024-09-24 12:56:03 EDT
DIRECTOR, BUREAU OF FIELD SERVICES

APPROVED BY: E-SIGNED by Demetrius Parker on 2024-09-24 09:51:49 EDT
DIRECTOR, BUREAU OF DEVELOPMENT

MDOT Michigan Department of Transportation

DEPARTMENT DIRECTOR
BRADLEY C. WIEFERICH, PE

STANDARD PLAN FOR
STEEL END SECTION

| 12/18/2024 | 06/12/2024 | R-88-E | SHEET |
|---|---|---|---|
| FHWA APPROVAL | PLAN DATE | | 1 OF 4 |

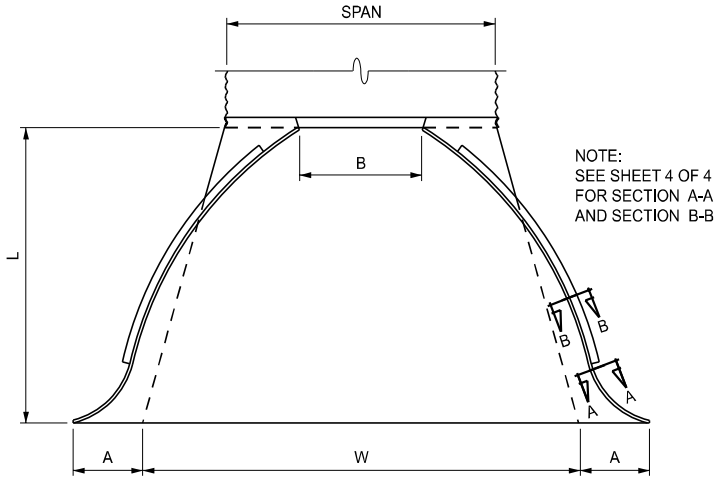


PLAN VIEW

| DIMENSIONS | | | | | | | | |
|---|---|---|---|---|---|---|---|---|
| DIMENSIONS IN INCHES | | | | | | | APPROX SLOPE | BODY |
| SPAN / RISE | MIN. THK. | A ± 1" | B MAX. | H ± 1" | L ± 1½" | W ± 2" | | |
| 17 x 13 | 0.064 | 7 | 9 | 6 | 19 | 30 | 2.50 | 1 Pc |
| 21 x 15 | 0.064 | 7 | 10 | 6 | 23 | 36 | 2.50 | 1 Pc |
| 24 x 18 | 0.064 | 8 | 12 | 6 | 28 | 42 | 2.50 | 1 Pc |
| 28 x 20 | 0.064 | 9 | 14 | 6 | 32 | 48 | 2.50 | 1 Pc |
| 35 x 24 | 0.079 | 10 | 16 | 6 | 39 | 60 | 2.50 | 1 Pc |
| 42 x 29 | 0.079 | 12 | 18 | 8 | 46 | 75 | 2.50 | 1 Pc |
| 49 x 33 | 0.109 | 13 | 21 | 9 | 53 | 85 | 2.50 | 2 Pc |
| 57 x 38 | 0.109 | 18 | 26 | 12 | 63 | 90 | 2.50 | 2 Pc |
| 64 x 43 | 0.109 | 18 | 30 | 12 | 70 | 102 | 2.25 | 2 Pc |
| * 71 x 47 | 0.109 | 18 | 33 | 12 | 77 | 114 | 2.25 | 3 Pc |
| * 77 x 52 | 0.109 | 18 | 36 | 12 | 77 | 126 | 2.00 | 3 Pc |
| * 83 x 57 | 0.109 | 18 | 39 | 12 | 77 | 138 | 2.00 | 3 Pc |

* ALL THREE PIECE BODIES HAVE 0.109" SIDES AND 0.138" CENTER PANELS. ENSURE THE WIDTH OF CENTER PANEL IS GREATER THAN 20% OF THE PIPE PERIPHERY. TIGHTLY JOIN MULTIPLE PANEL BODIES AT LAP SEAMS USING ⅜" DIAMETER GALVANIZED RIVETS OR BOLTS.

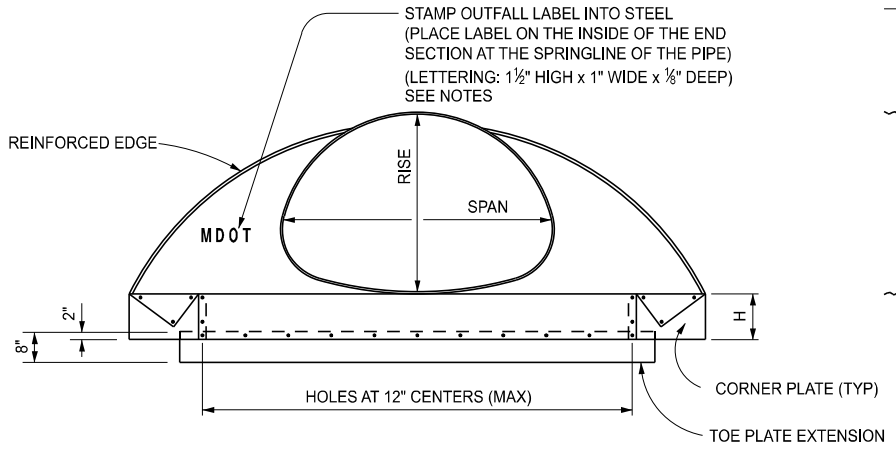


END VIEW

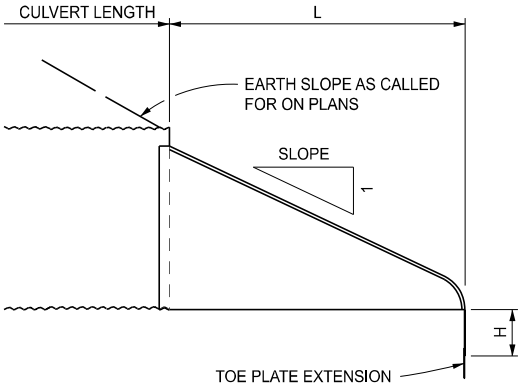


LONGITUDINAL VIEW

NOTE: SEE SHEET 3 FOR CONNECTION DETAILS

# STEEL END SECTION FOR CORRUGATED STEEL PIPE ARCHES

MDOT
Michigan Department of Transportation

DEPARTMENT DIRECTOR
BRADLEY C. WIEFERICH, PE

STANDARD PLAN FOR
STEEL END SECTION

| 12/18/2024 | 06/12/2024 | R-88-E | SHEET |
|---|---|---|---|
| FHWA APPROVAL | PLAN DATE | | 2 OF 4 |

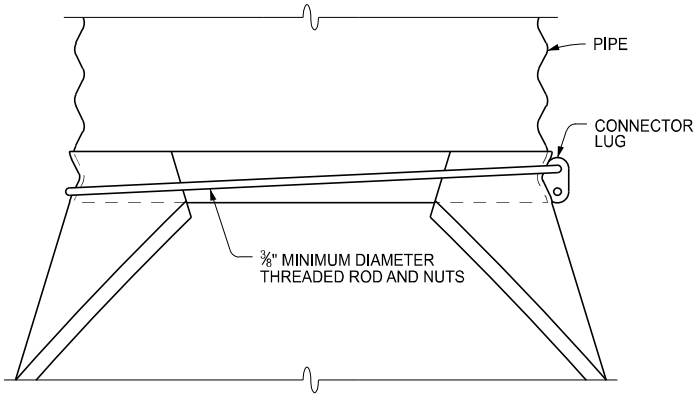


## TYPE 1 CONNECTOR

USE ON CIRCULAR PIPE DIAMETERS 12" THROUGH 24"

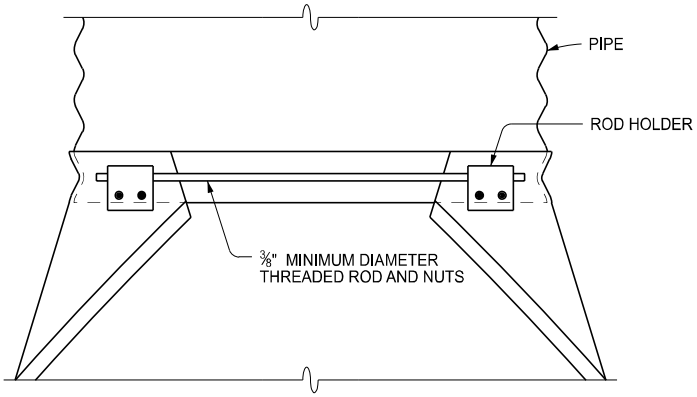


## TYPE 2 CONNECTOR

USE ON CIRCULAR PIPE DIAMETERS 30" AND 36"
AND FOR ARCH PIPE SIZES 35" x 24" AND 42" x 29"

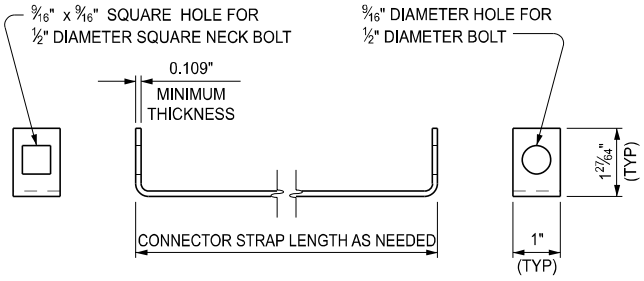


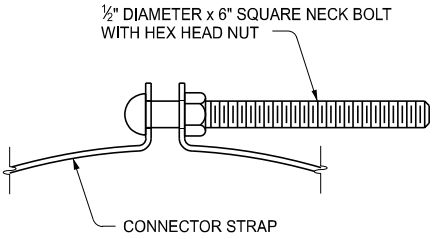


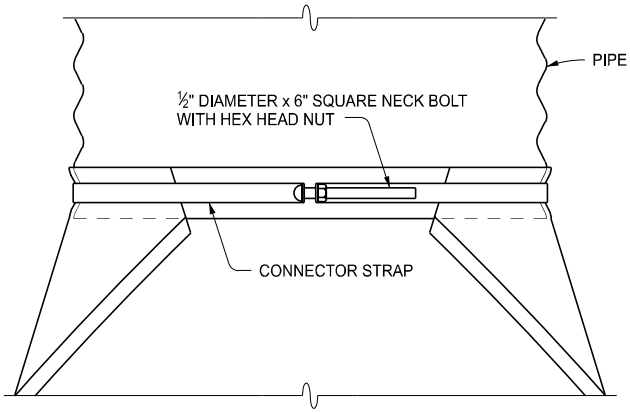


## TYPE 1A CONNECTOR

USE ON CIRCULAR PIPE DIAMETERS 12" THROUGH 24"
AND FOR ARCH PIPE SIZES 17" x 13" THROUGH 28" x 20"

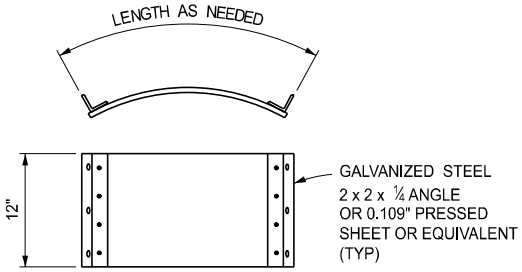


## STEEL BAND

(PART OF END SECTION)

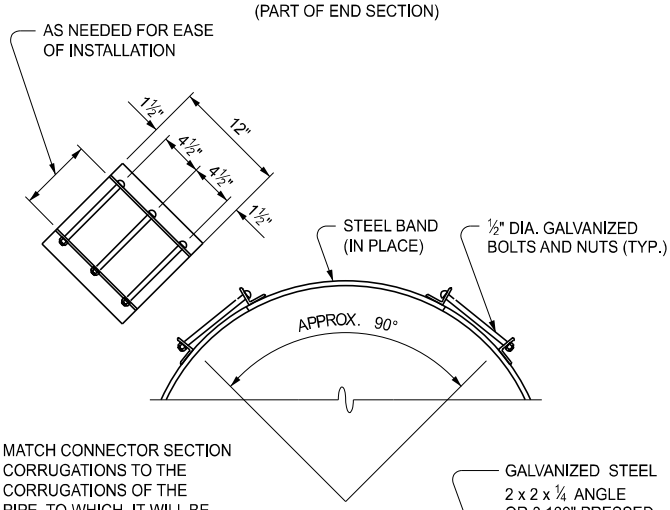


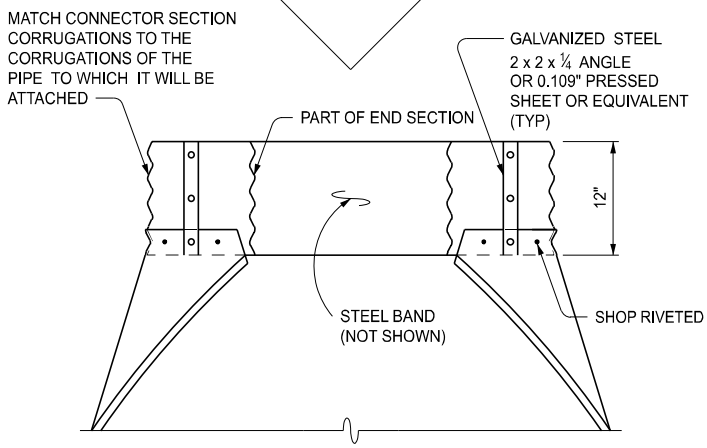


## TYPE 3 CONNECTOR

USE ON CIRCULAR PIPE DIAMETERS 42" THROUGH 84"
AND FOR ARCH PIPE SIZES 49" x 33" THROUGH 83" x 57"

MDOT
Michigan Department of Transportation

DEPARTMENT DIRECTOR
BRADLEY C. WIEFERICH, PE

STANDARD PLAN FOR
STEEL END SECTION

| 12/18/2024 | 06/12/2024 | R-88-E | SHEET |
|---|---|---|---|
| FHWA APPROVAL | PLAN DATE | | 3 OF 4 |

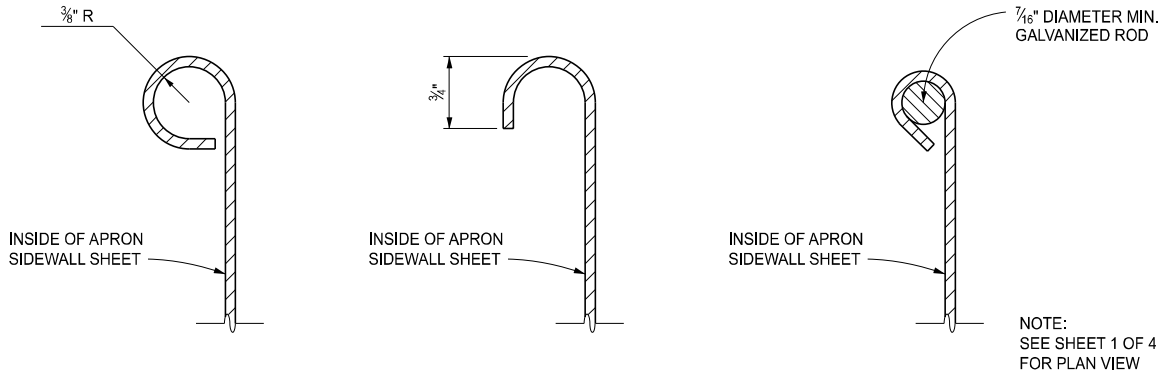


## SECTION A - A

REINFORCED EDGE ALTERNATIVES

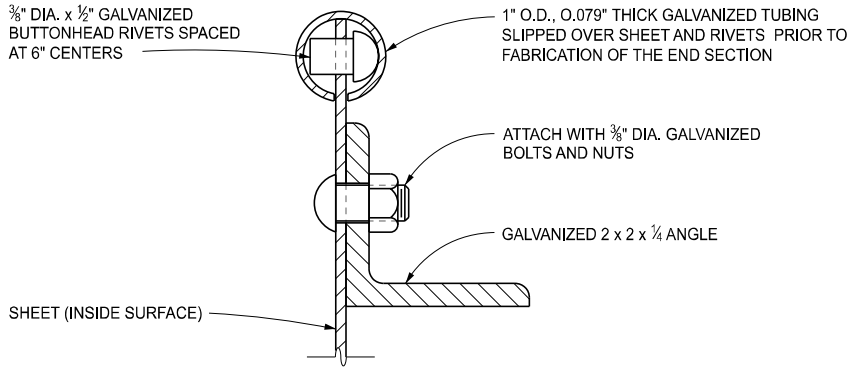


## SECTION B - B

USE ON CIRCULAR PIPE DIAMETERS 60" THROUGH 84"
AND FOR ARCH PIPE SIZES 77" x 52" AND 83" x 57"

NOTES:

ENSURE GALVANIZED STEEL MEETS THE REQUIREMENTS SPECIFIED IN THE STANDARD SPECIFICATIONS FOR CONSTRUCTION.

GALVANIZED TOE PLATE EXTENSIONS ARE REQUIRED ON STEEL END SECTIONS AS FOLLOWS:

1. WHEN INDICATED ON THE PLANS.
2. WHEN AUTHORIZED BY THE ENGINEER.
3. WHEN THE HEIGHT OF FILL IS 10' OR MORE.
4. WHEN THE CULVERT GRADE IS 10% OR MORE.

MATCH PUNCH GALVANIZED TOE PLATE EXTENSIONS TO FIT HOLES IN THE TOE PLATE AND SUPPLY LOOSE, COMPLETE WITH 3/8" DIAMETER GALVANIZED BOLTS. LENGTH OF THE TOE PLATE EXTENSION = W + A (FOR ALL SIZES).

ENSURE ALL CONNECTOR SECTIONS, TOE PLATES EXTENSIONS AND CORNER PLATES ARE GALVANIZED AND MATCH THE THICKNESS OF THE APRON CENTER PANEL.

THE USE OF CONNECTOR TYPES DESIGNATED FOR LARGER CORRUGATED STEEL PIPES WILL BE ALLOWED ON SMALLER CORRUGATED PIPES.

CIRCULAR AND ARCH PIPES SHOWN ON THIS PLAN HAVE 2 2/3" x 1/2" CORRUGATIONS; EQUIVALENT PIPE SIZES WITH 3" x 1" OR 5" x 1" CORRUGATIONS WILL BE ALLOWED.

THE DEPARTMENT WILL ACCEPT ALTERNATE DESIGNS THAT HAVE PRIOR APPROVAL.

USE OUTFALL LABELS ONLY WHERE STORMWATER WILL DISCHARGE DIRECTLY INTO THE WATERS OF THE STATE.

| | | | | |
|---|---|---|---|---|
| MDOT Michigan Department of Transportation | STANDARD PLAN FOR STEEL END SECTION | | | |
| DEPARTMENT DIRECTOR BRADLEY C. WIEFERICH, PE | 12/18/2024 FHWA APPROVAL | 06/12/2024 PLAN DATE | R-88-E | SHEET 4 OF 4 |

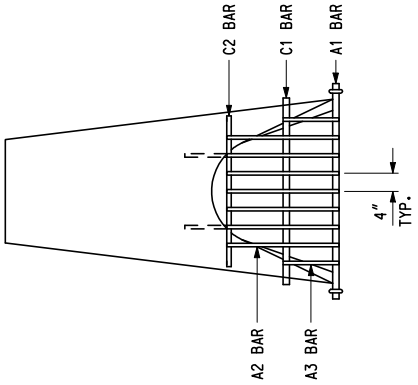


PLAN VIEW

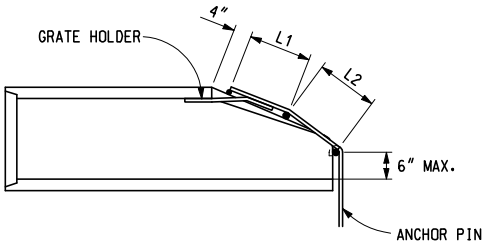


LONGITUDINAL SECTION

| STEEL REINFORCEMENT QUANTITIES | | | | | | | | | | |
|---|---|---|---|---|---|---|---|---|---|---|
| DIAMETER | | 12″ | | | 15″ | | | 18″ | | |
| BAR | BAR SIZE | NUMBER REQUIRED | LENGTH | WEIGHT (LBS) | NUMBER REQUIRED | LENGTH | WEIGHT (LBS) | NUMBER REQUIRED | LENGTH | WEIGHT (LBS) |
| A1 | #10 | 1 | 34″ | 12 | 1 | 40″ | 14 | 1 | 48″ | 17 |
| A2 | #6 | 5 | 24″ | 15 | 5 | 28″ | 17 | 7 | 28″ | 24 |
| A3 | #6 | | | | 2 | 14″ | 3 | 2 | 14″ | 3 |
| | | | | | | | | | | |
| C1 | #10 | 1 | 36″ | 13 | 1 | 40″ | 14 | 1 | 44″ | 16 |
| C2 | #8 | 1 | 30″ | 6 | 1 | 34″ | 7 | 1 | 36″ | 8 |
| | | | | | | | | | | |
| ANCHOR PIN | #6 | 2 | 36″ | 9 | 2 | 36″ | 9 | 2 | 36″ | 9 |
| GRATE HOLDER | #6 | 2 | 20″ | 5 | 2 | 20″ | 5 | 2 | 20″ | 5 |
| TOTAL STEEL WEIGHT (LBS) | | | | 60 | | | 69 | | | 82 |

| DIMENSIONS | | |
|---|---|---|
| DIAMETER | L1 | L2 |
| 12″ | 12″ | 12″ |
| 15″ | 14″ | 14″ |
| 18″ | 14″ | 14″ |

## GRATE FOR 12″ THROUGH 18″ DIAMETER PIPE WITH CONCRETE END SECTION

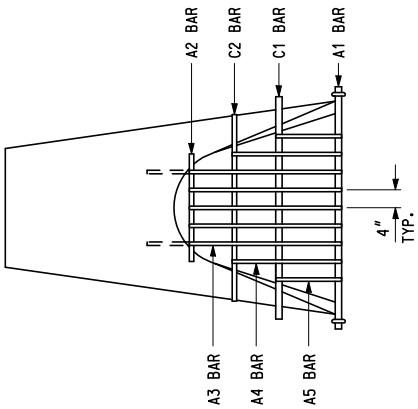


PLAN VIEW

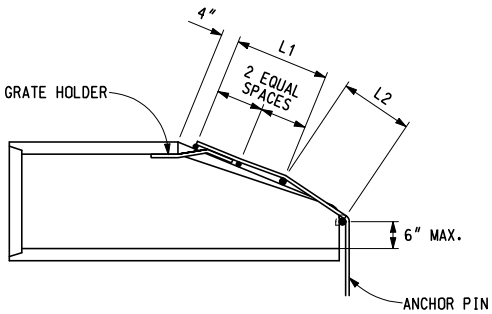


LONGITUDINAL SECTION

| STEEL REINFORCEMENT QUANTITIES | | | | |
|---|---|---|---|---|
| DIAMETER | | 21″ | | |
| BAR | BAR SIZE | NUMBER REQUIRED | LENGTH | WEIGHT (LBS) |
| A1 | #10 | 1 | 54″ | 19 |
| A2 | #8 | 1 | 24″ | 5 |
| A3 | #6 | 5 | 37″ | 23 |
| A4 | #6 | 2 | 26½″ | 7 |
| A5 | #6 | 2 | 16″ | 4 |
| | | | | |
| C1 | #10 | 1 | 52″ | 18 |
| C2 | #8 | 1 | 44″ | 9 |
| | | | | |
| ANCHOR PIN | #6 | 2 | 36″ | 9 |
| GRATE HOLDER | #6 | 2 | 20″ | 5 |
| TOTAL STEEL WEIGHT (LBS) | | | | 99 |

| DIMENSIONS | | |
|---|---|---|
| DIAMETER | L1 | L2 |
| 21″ | 21″ | 16″ |

## GRATE FOR 21″ DIAMETER PIPE WITH CONCRETE END SECTION

MDOT Michigan Department of Transportation

PREPARED BY DESIGN DIVISION

DRAWN BY: B.L.T.

CHECKED BY: W.K.P.

ENGINEER OF CONSTRUCTION & TECHNOLOGY

ENGINEER OF MAINTENANCE

ENGINEER OF TRAFFIC AND SAFETY

ENGINEER - ROAD DESIGN

ENGINEER OF DESIGN

DEPARTMENT DIRECTOR
Gregory J. Rosine

BY: Gary D. Taylor
CHIEF ENGINEER/DEPUTY DIRECTOR
BUREAU OF HIGHWAY TECHNICAL SERVICES

MICHIGAN DEPARTMENT OF TRANSPORTATION
BUREAU OF HIGHWAY TECHNICAL SERVICES STANDARD PLAN FOR

# STEEL GRATES FOR END SECTIONS

| 9-14-2001 | 2-26-2001 | R-92-C | SHEET 1 OF 6 |
|---|---|---|---|
| F.H.W.A. APPROVAL | PLAN DATE | | |

NOTES:

THIS STANDARD PLAN WILL SERVE AS A KEY IN THE SELECTION OF THE APPROPRIATE SOIL EROSION AND SEDIMENTATION CONTROL DETAILS. THIS PLAN ALSO PROVIDES THE KEY TO THE NUMBERED EROSION CONTROL ITEMS SPECIFIED ON THE CONSTRUCTION PLANS. REFER TO THE MDOT SOIL EROSION & SEDIMENTATION CONTROL MANUAL, SECTION 6 FOR SPECIFIC DETAILS, CONTRACT ITEMS (PAY ITEMS), AND PAY UNITS.

COLLECTED SILT AND SEDIMENT SHALL BE REMOVED PERIODICALLY TO MAINTAIN THE EFFECTIVENESS OF THE SEDIMENT TRAP, SEDIMENT BASIN, AND SILT FENCE. AGGREGATES PLACED IN STREAMS SHOULD CONTAIN A MINIMUM OF FINES.

TEMPORARY EROSION AND SEDIMENTATION CONTROL PROVISIONS SHALL BE COORDINATED WITH THE PERMANENT CONTROL MEASURES TO ASSURE EFFECTIVE CONTROL OF SEDIMENTS DURING CONSTRUCTION OF THE PROJECT.

ALL TEMPORARY EROSION CONTROL DEVICES SHALL BE REMOVED AFTER VEGETATION ESTABLISHMENT OR AT THE DISCRETION OF THE ENGINEER. CARE SHALL BE TAKEN DURING REMOVAL TO MINIMIZE SILTATION IN NEARBY DRAINAGE COURSES.

MICHIGAN DEPARTMENT OF TRANSPORTATION
BUREAU OF HIGHWAY DEVELOPMENT STANDARD PLAN FOR

# SOIL EROSION & SEDIMENTATION CONTROL MEASURES

| | | | |
|---|---|---|---|
| 9-10-2010<br>F.H.W.A. APPROVAL | 6-3-2010<br>PLAN DATE | R-96-E | SHEET<br>6 OF 6 |

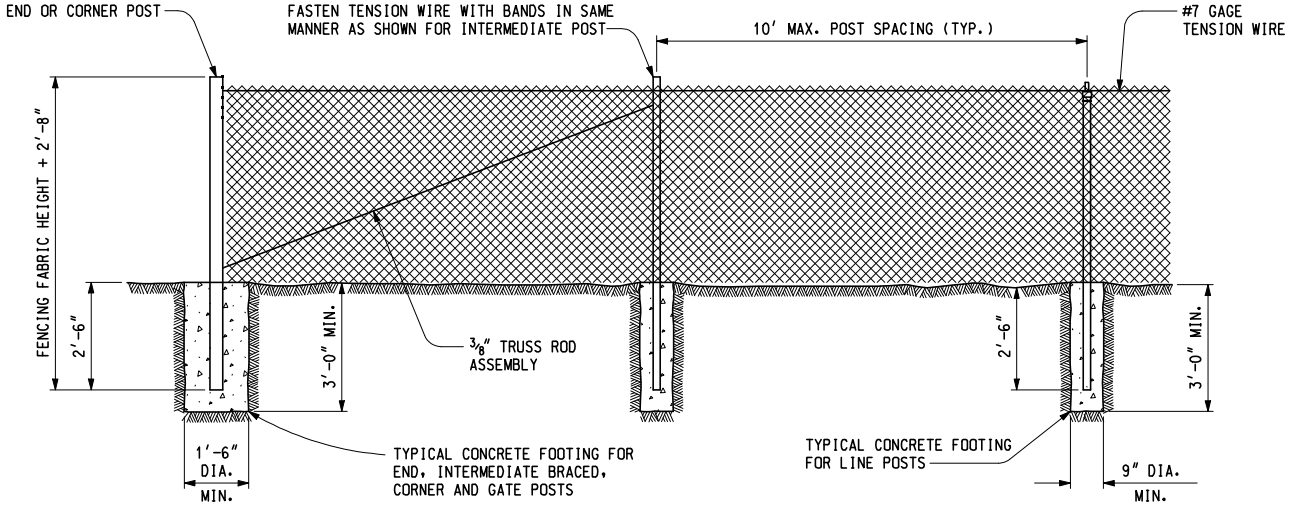


END OR CORNER POST

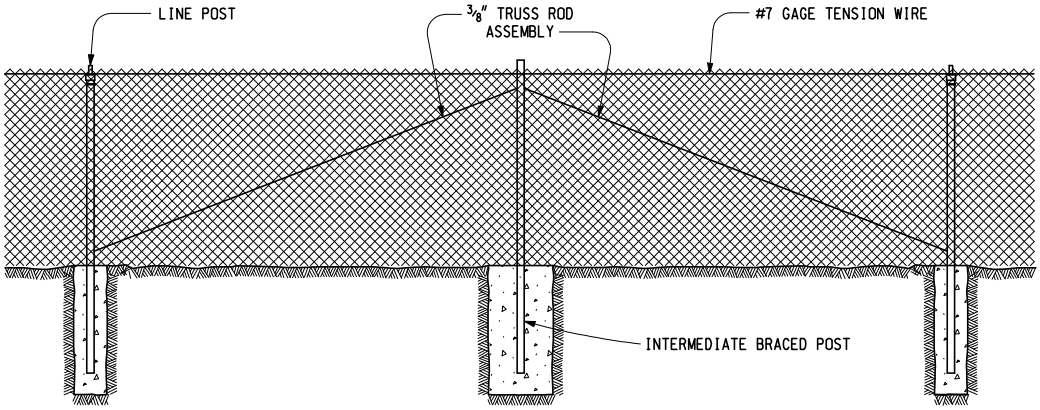


INTERMEDIATE POST

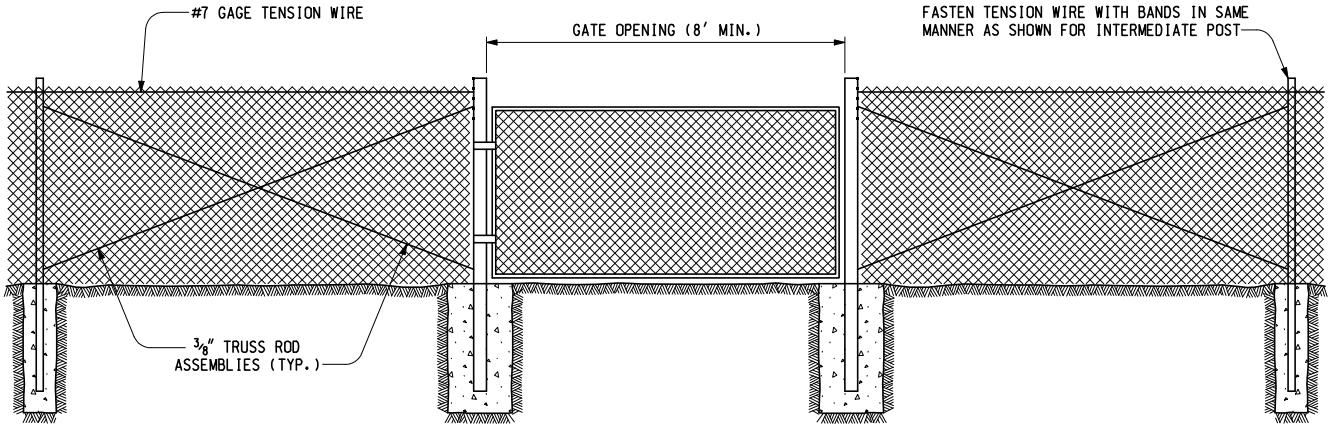


GATE

| | | | |
|---|---|---|---|
| MDOT Michigan Department of Transportation | ENGINEER OF CONSTRUCTION & TECHNOLOGY | ENGINEER - ROAD DESIGN | MICHIGAN DEPARTMENT OF TRANSPORTATION<br>BUREAU OF HIGHWAY TECHNICAL SERVICES STANDARD PLAN FOR |
| PREPARED BY DESIGN DIVISION | ENGINEER OF MAINTENANCE | ENGINEER OF DESIGN | CHAIN LINK FENCE<br>(USING TENSION WIRE) |
| DRAWN BY: B.L.T. | ENGINEER OF TRAFFIC AND SAFETY | DEPARTMENT DIRECTOR Gregory J. Rosine<br>BY: CHIEF ENGINEER/DEPUTY DIRECTOR BUREAU OF HIGHWAY TECHNICAL SERVICES | |
| CHECKED BY: W.K.P. | | | |

| 9-14-2001 | 3-20-2001 | R-98-B | SHEET 1 OF 2 |
|---|---|---|---|
| F.H.W.A. APPROVAL | PLAN DATE | | |

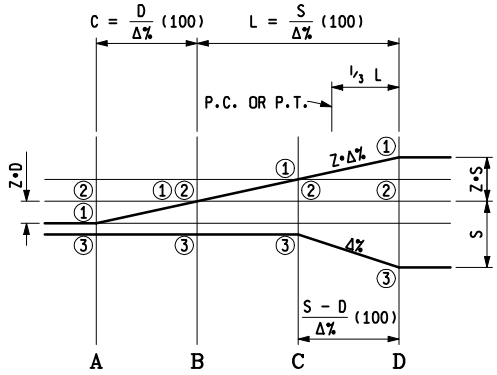


| Z VALUES FOR UNSPIRALED TWO WAY ROADWAYS WITH AN ODD NUMBER OF LANES | |
|---|---|
| NUMBER OF LANES | Z |
| 3 | 1/2 |
| 5 | 2/3 |
| 7 | 3/4 |

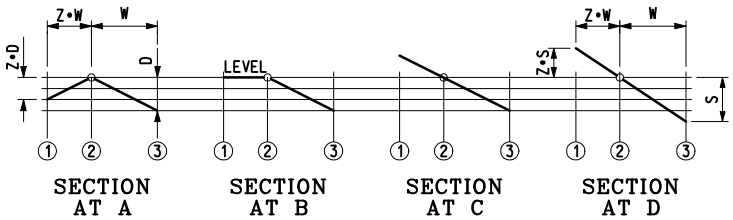


UNSPIRALED TWO WAY ROADWAY WITH ODD NUMBER OF LANES
(FARTHEST EDGE ON LOW SIDE)

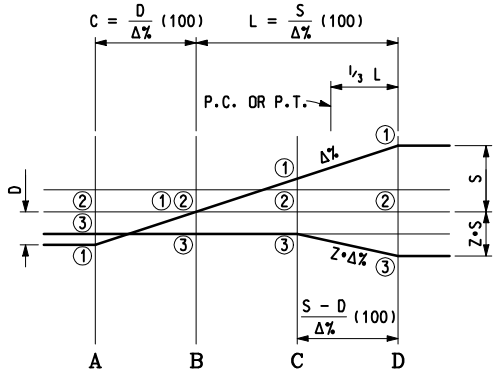


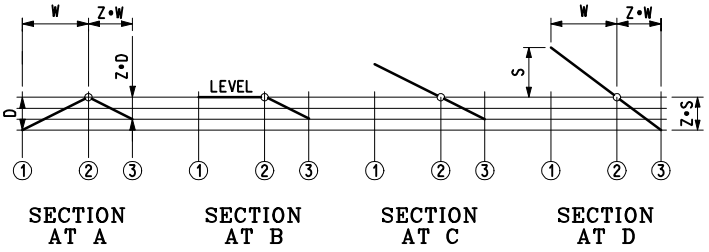


UNSPIRALED TWO WAY ROADWAY WITH ODD NUMBER OF LANES
(FARTHEST EDGE ON HIGH SIDE)

MICHIGAN DEPARTMENT OF TRANSPORTATION
BUREAU OF HIGHWAY DEVELOPMENT STANDARD PLAN FOR

# SUPERELEVATION AND PAVEMENT CROWNS

| 9-10-2010 | 10-19-2009 | R-107-H | SHEET |
|---|---|---|---|
| F.H.W.A. APPROVAL | PLAN DATE | | 7 OF 7 |

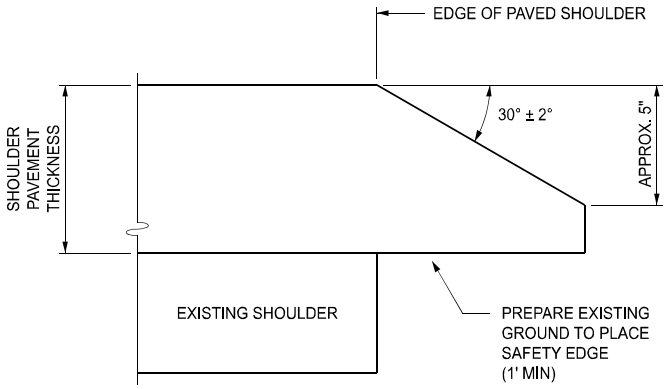


SAFETY EDGE FOR CONCRETE PAVEMENT
OVERLAY

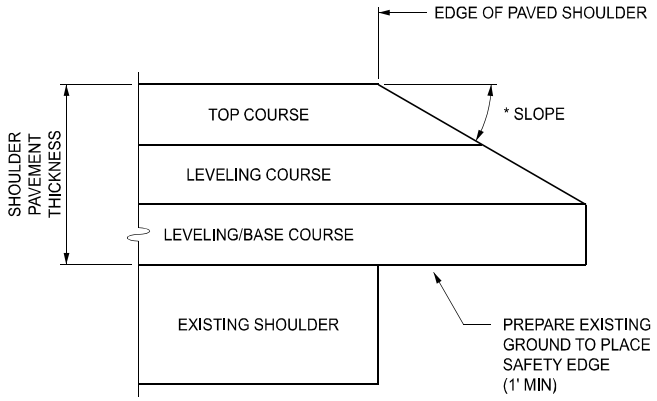


CONFIGURATION 1 FOR
PAVEMENT THICKNESS GREATER THAN 5"

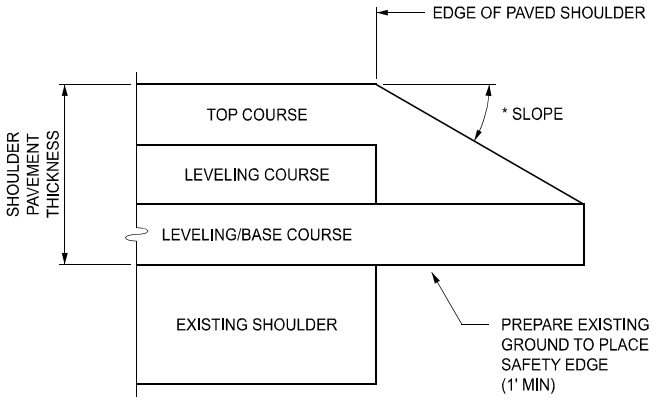


CONFIGURATION 2 FOR
PAVEMENT THICKNESS GREATER THAN 5"

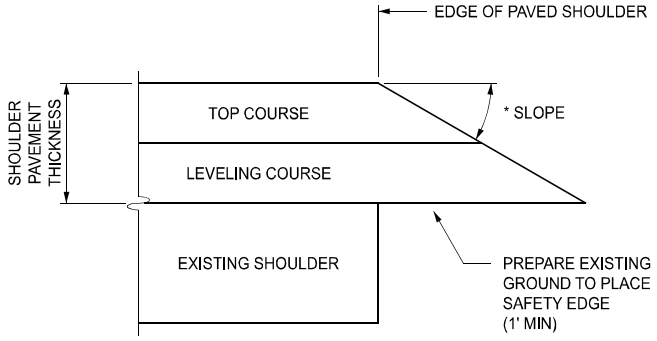


CONFIGURATION 1 FOR
PAVEMENT THICKNESS 5" OR LESS

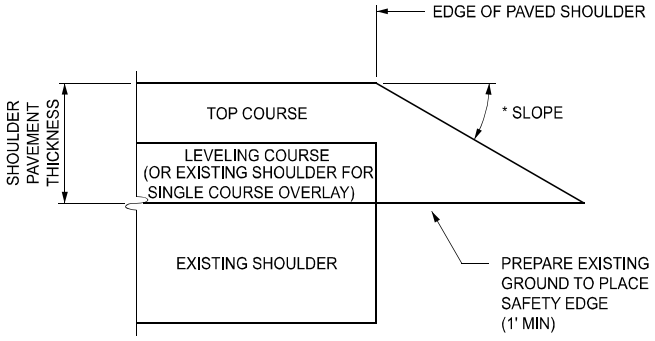


CONFIGURATION 2 FOR
PAVEMENT THICKNESS 5" OR LESS

* THE RANGE FOR SLOPE IS:
29° MINIMUM
30° DESIREABLE
40° MAXIMUM

SAFETY EDGE FOR HMA PAVEMENT
OVERLAY

| | | | |
|---|---|---|---|
| APPROVED BY: E-SIGNED by JASON GUTTING on 2024-09-24 12:56:51 EDT<br>DIRECTOR, BUREAU OF FIELD SERVICES<br>APPROVED BY: E-SIGNED by Demetrius Parker on 2024-09-24 09:52:12 EDT<br>DIRECTOR, BUREAU OF DEVELOPMENT | MDOT Michigan Department of Transportation<br>DEPARTMENT DIRECTOR<br>BRADLEY C. WIEFERICH, PE | STANDARD PLAN FOR<br>PAVEMENT SAFETY EDGE | |
| | | 12/18/2024 FHWA APPROVAL<br>04/30/2024 PLAN DATE | R-110-B | SHEET 1 OF 3 |

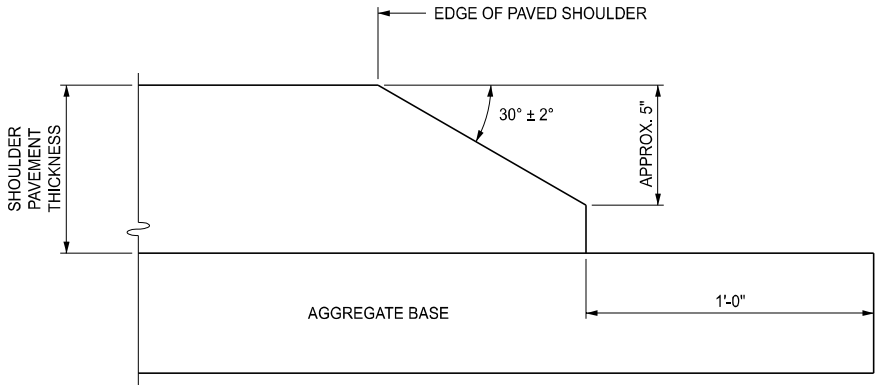


## SAFETY EDGE FOR CONCRETE PAVEMENT

NEW CONSTRUCTION / RECONSTRUCTION

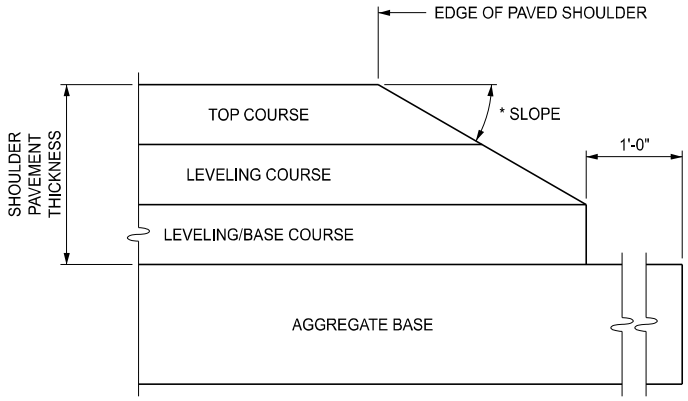


CONFIGURATION 1 FOR
PAVEMENT THICKNESS GREATER THAN 5"

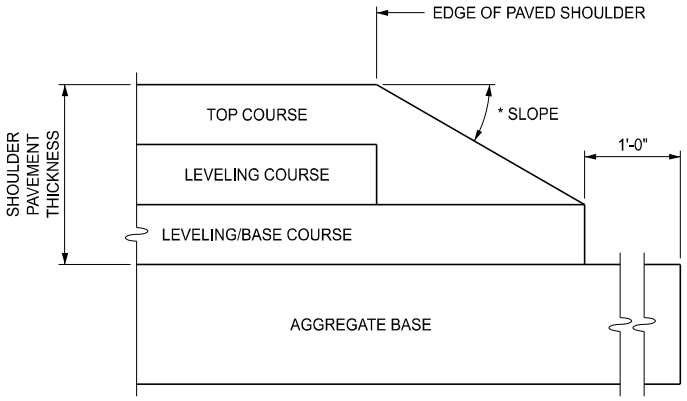


CONFIGURATION 2 FOR
PAVEMENT THICKNESS GREATER THAN 5"

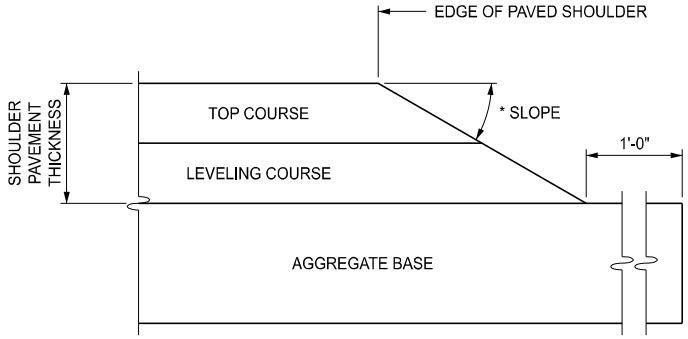


CONFIGURATION 1 FOR
PAVEMENT THICKNESS 5" OR LESS

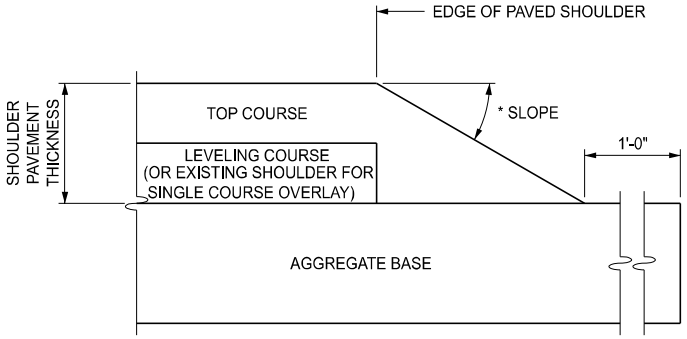


CONFIGURATION 2 FOR
PAVEMENT THICKNESS 5" OR LESS

* THE RANGE FOR SLOPE IS:
29° MINIMUM
30° DESIREABLE
40° MAXIMUM

## SAFETY EDGE FOR HMA PAVEMENT

NEW CONSTRUCTION / RECONSTRUCTION

| | | | | |
|---|---|---|---|---|
| MDOT Michigan Department of Transportation | STANDARD PLAN FOR PAVEMENT SAFETY EDGE | | | |
| DEPARTMENT DIRECTOR BRADLEY C. WIEFERICH, PE | 12/18/2024 FHWA APPROVAL | 04/30/2024 PLAN DATE | R-110-B | SHEET 2 OF 3 |

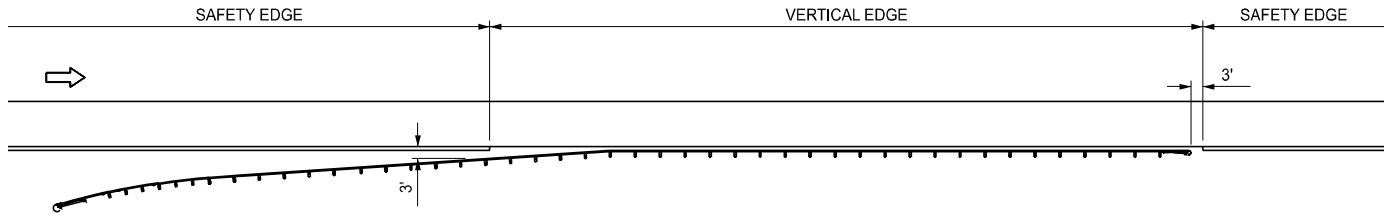


SAFETY EDGE TREATMENT AT GUARDRAIL

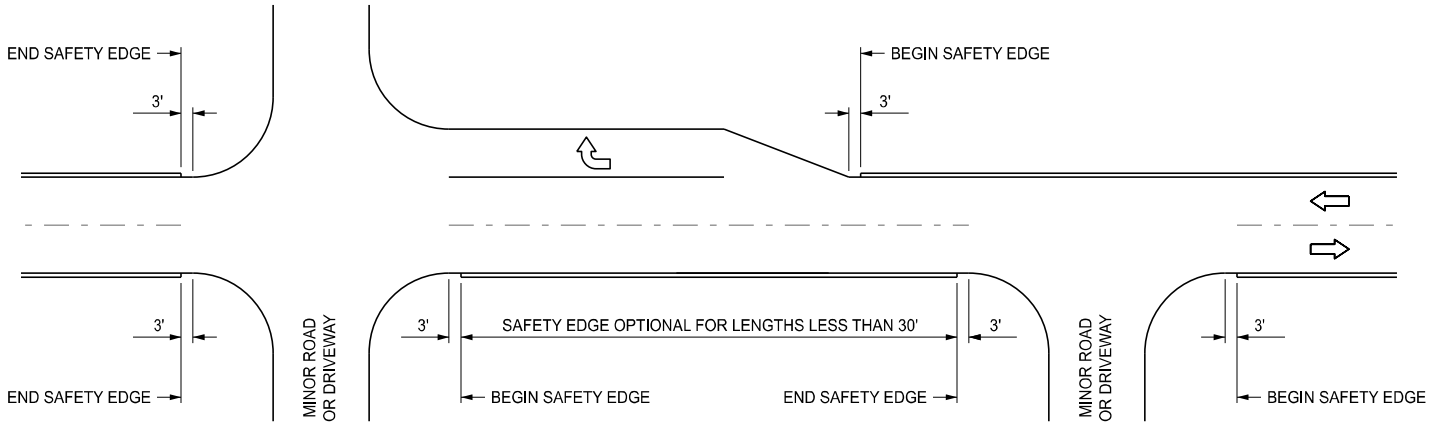


SAFETY EDGE TREATMENT AT INTERSECTIONS AND DRIVEWAYS

NOTES:

TERMINATE SAFETY EDGE ON OUTSIDE FREEWAY SHOULDERS PRIOR TO RAMP SHOULDER TRANSITIONS AND CONTINUE WHERE FULL MAINLINE SHOULDER RESUMES.

| | | | | |
|---|---|---|---|---|
| MDOT Michigan Department of Transportation | STANDARD PLAN FOR PAVEMENT SAFETY EDGE | | | |
| DEPARTMENT DIRECTOR BRADLEY C. WIEFERICH, PE | 12/18/2024 FHWA APPROVAL | 04/30/2024 PLAN DATE | R-110-B | SHEET 3 OF 3 |

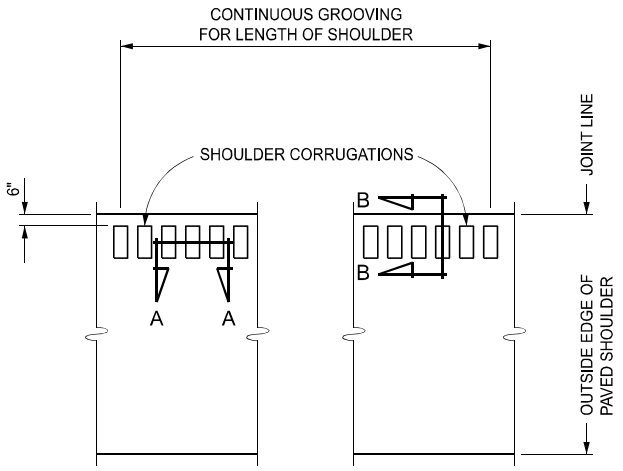


HMA SHOULDER PLAN
ADJACENT TO 12' LANE

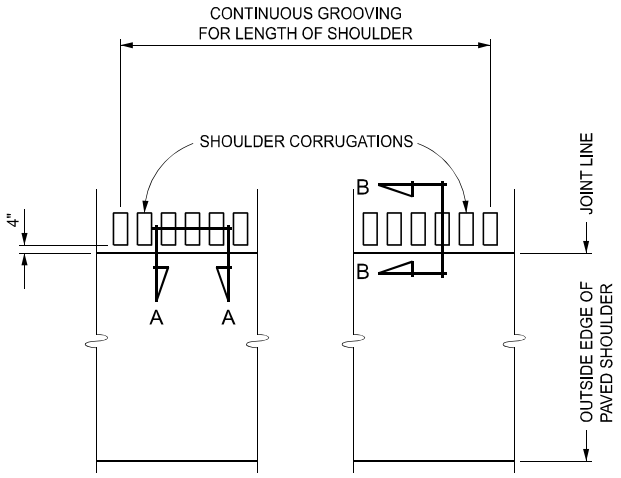


HMA SHOULDER PLAN
ADJACENT TO 14' LANE

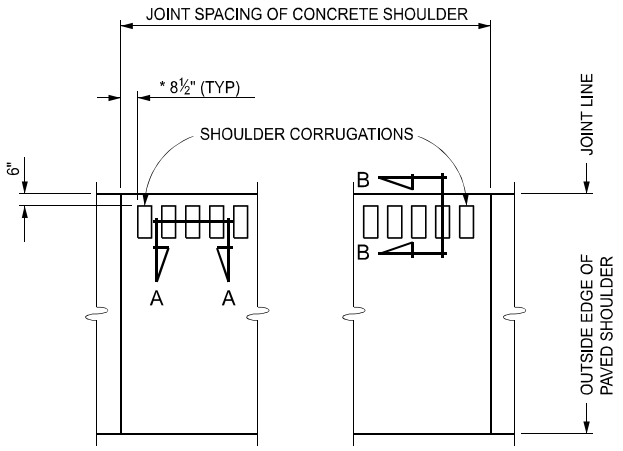


CONCRETE SHOULDER PLAN
ADJACENT TO 12' LANE

* ENSURE THE DISTANCE FROM THE CORRUGATION TO THE TRANSVERSE JOINT IS AT LEAST 6" BUT LESS THAN 12".

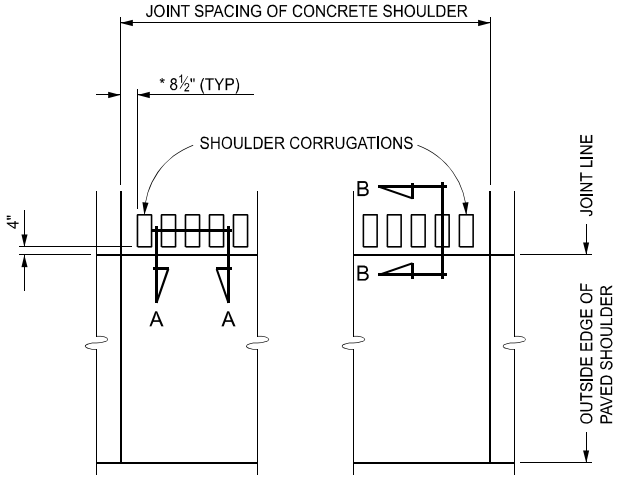


CONCRETE SHOULDER PLAN
ADJACENT TO 14' LANE

* ENSURE THE DISTANCE FROM THE CORRUGATION TO THE TRANSVERSE JOINT IS AT LEAST 6" BUT LESS THAN 12".

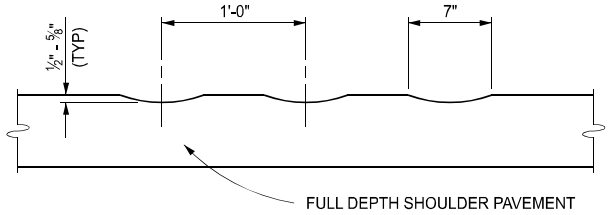


SECTION A - A

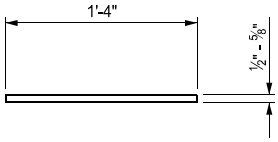


SECTION B - B

# FREEWAY SHOULDER CORRUGATIONS

(FOR FREEWAY SHOULDERS PAVED 4 FEET OR GREATER)

| | | | |
|---|---|---|---|
| APPROVED BY: E-SIGNED by JASON GUTTING on 2024-09-24 12:56:59 EDT<br>DIRECTOR, BUREAU OF FIELD SERVICES | MDOT Michigan Department of Transportation | STANDARD PLAN FOR<br>SHOULDER AND CENTER LINE CORRUGATIONS | |
| APPROVED BY: E-SIGNED by Demetrius Parker on 2024-09-24 09:52:20 EDT<br>DIRECTOR, BUREAU OF DEVELOPMENT | DEPARTMENT DIRECTOR<br>BRADLEY C. WIEFERICH, PE | 12/18/2024 FHWA APPROVAL<br>05/16/2024 PLAN DATE | R-112-J | SHEET 1 OF 10 |

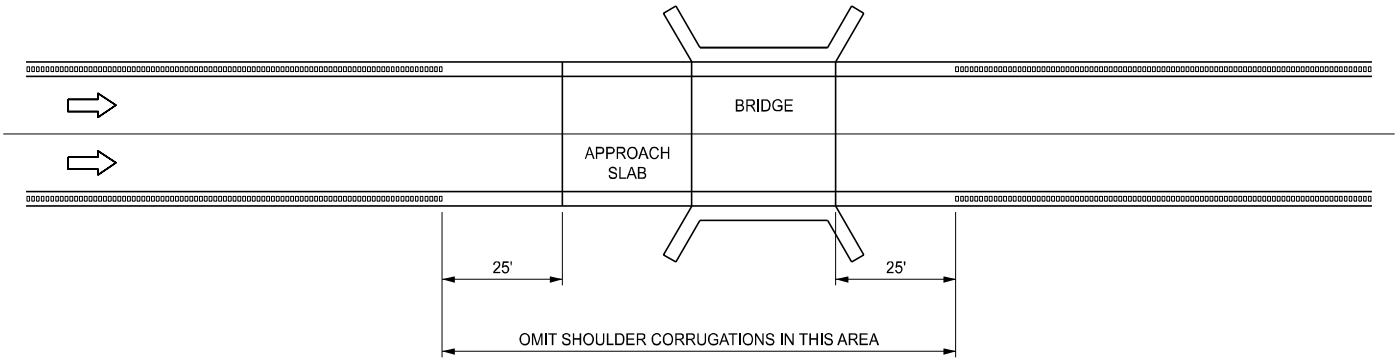


SHOULDER CORRUGATIONS AT BRIDGES

# FREEWAY SHOULDER CORRUGATIONS

(FOR FREEWAY SHOULDERS PAVED 4 FEET OR GREATER)

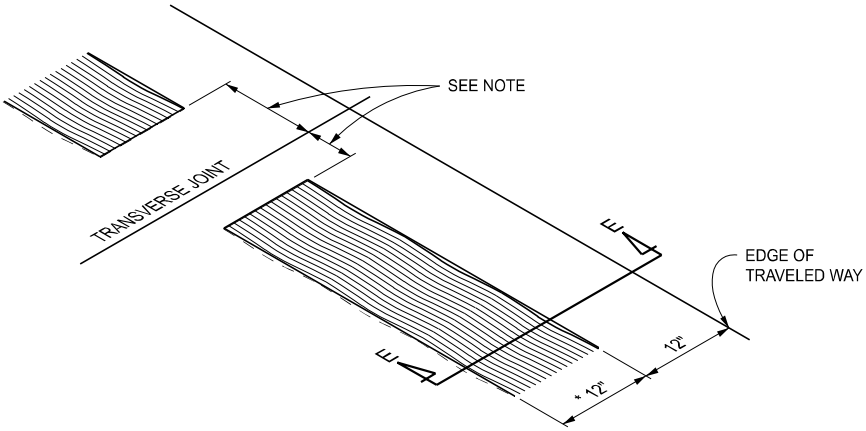


* DO NOT EXCEED A LATERAL DEVIATION OF 1" IN 100'.

NOTE:

ENSURE THE DISTANCE FROM THE SHOULDER CORRUGATION TO THE TRANSVERSE JOINT IS AT LEAST 6" BUT LESS THAN 12" ON CONRETE PAVEMENTS.

TYPICAL NON-FREEWAY
SHOULDER CORRUGATION INSTALLATION

PLAN VIEW

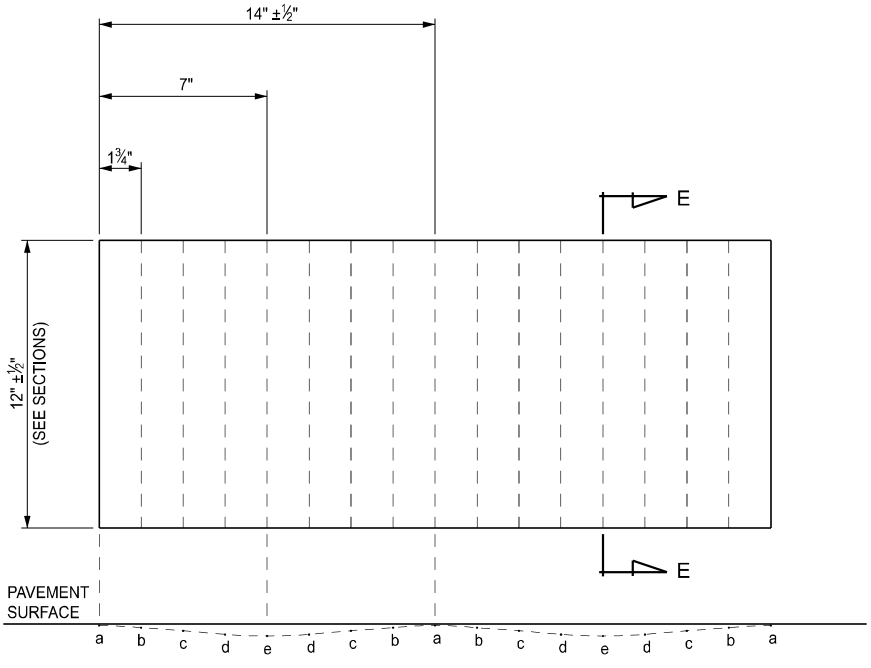


PROFILE VIEW

| | DEPTH AT EDGE | |
|---|---|---|
| LOCATION | MILS | INCHES * |
| a | 62.5 | 1/16 |
| b | 156 | 5/32 |
| c | 281 | 9/32 |
| d | 438 | 7/16 |
| e | 500 | ½ |

* +⅛"

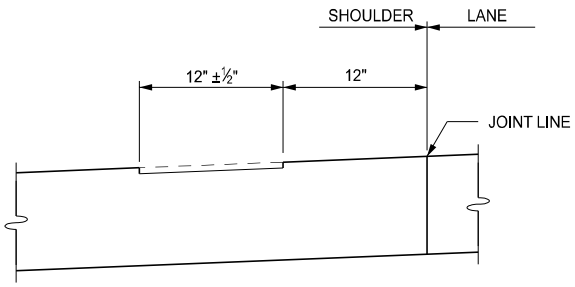


SECTION E-E

CONCRETE & HMA
SHOULDER

# SINUSOIDAL CORRUGATIONS

| | | | | |
|---|---|---|---|---|
| MDOT Michigan Department of Transportation<br>DEPARTMENT DIRECTOR<br>BRADLEY C. WIEFERICH, PE | STANDARD PLAN FOR<br>SHOULDER AND CENTER LINE CORRUGATIONS | | | |
| | 12/18/2024<br>FHWA APPROVAL | 05/16/2024<br>PLAN DATE | R-112-J | SHEET<br>3 OF 10 |

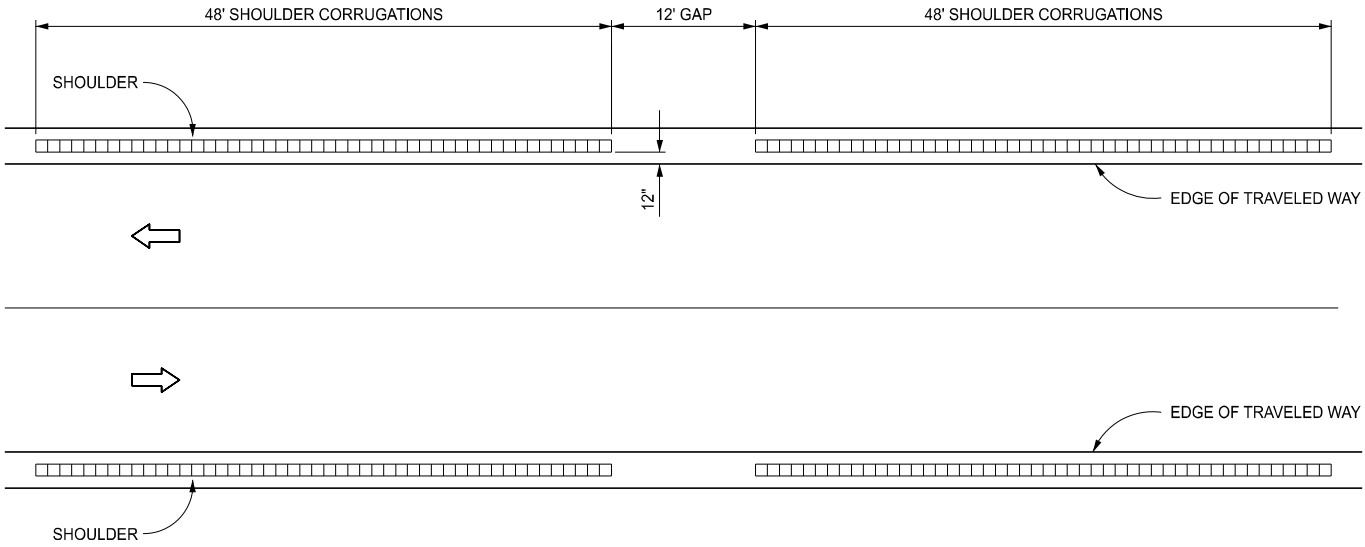


SHOULDER CORRUGATIONS ON TWO-WAY ROADWAYS

# NON-FREEWAY SHOULDER CORRUGATIONS

(FOR NON-FREEWAY SHOULDERS PAVED 6 FEET OR GREATER)

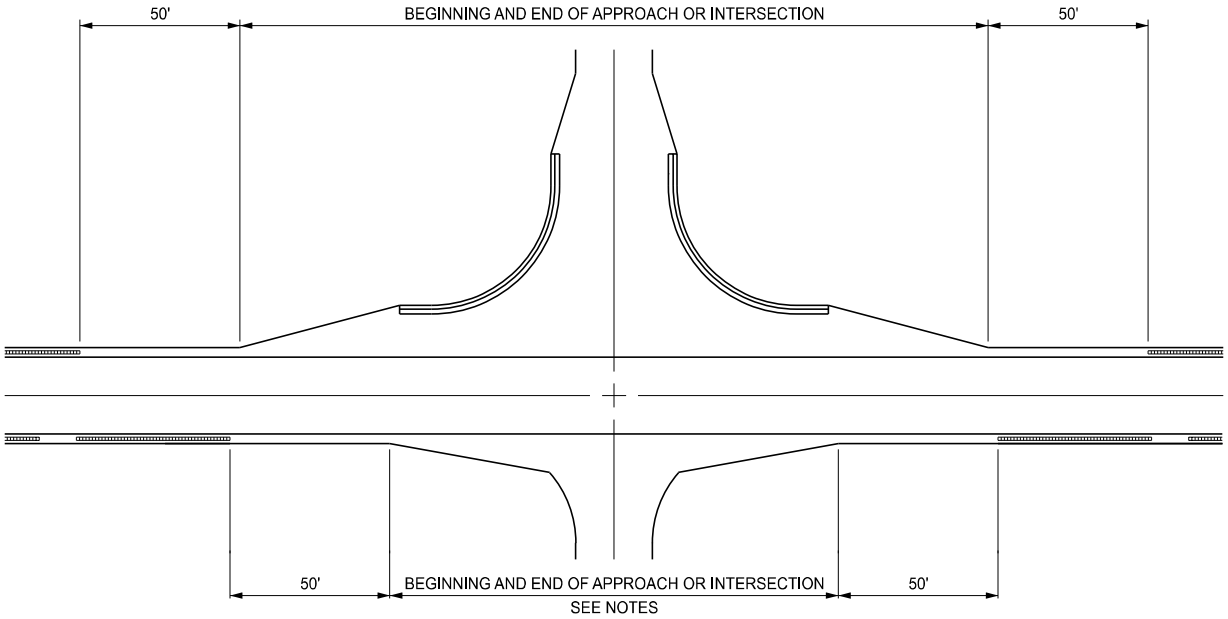


NOTE:

WHEN DIRECTED BY THE ENGINEER, OMIT SHOULDER CORRUGATIONS
IN AREAS WITH A HIGH CONCENTRATION OF DRIVEWAYS.

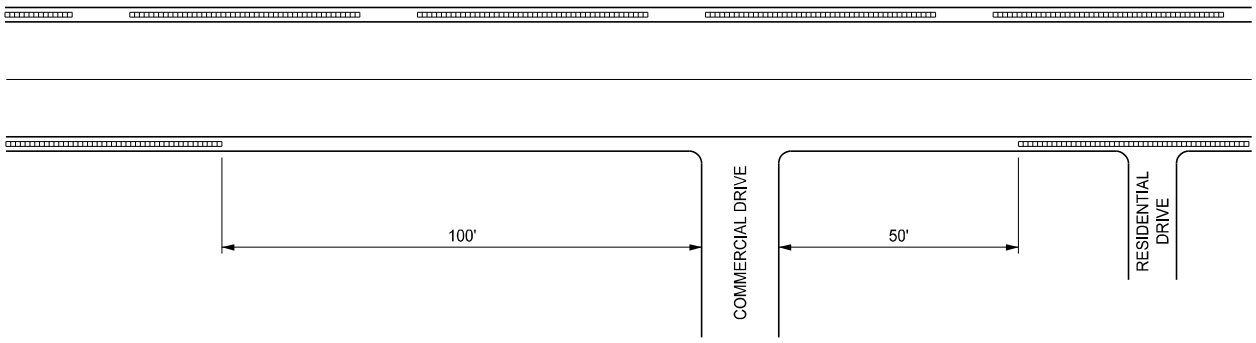


SHOULDER CORRUGATIONS AT INTERSECTIONS

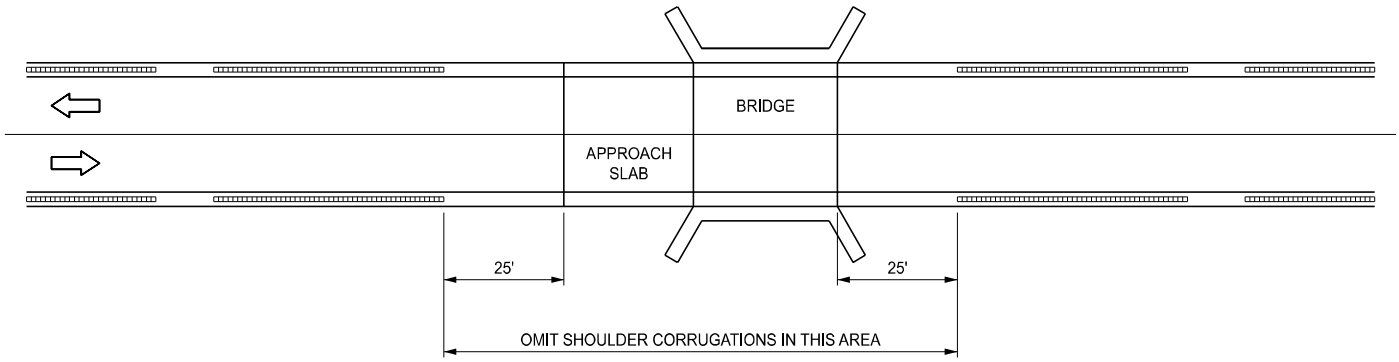


SHOULDER CORRUGATIONS AT BRIDGES

# NON-FREEWAY SHOULDER CORRUGATIONS

(FOR NON-FREEWAY SHOULDERS PAVED 6 FEET OR GREATER)

| | | | | |
|---|---|---|---|---|
| MDOT Michigan Department of Transportation | STANDARD PLAN FOR SHOULDER AND CENTER LINE CORRUGATIONS | | | |
| DEPARTMENT DIRECTOR BRADLEY C. WIEFERICH, PE | 12/18/2024 FHWA APPROVAL | 05/16/2024 PLAN DATE | R-112-J | SHEET 5 OF 10 |

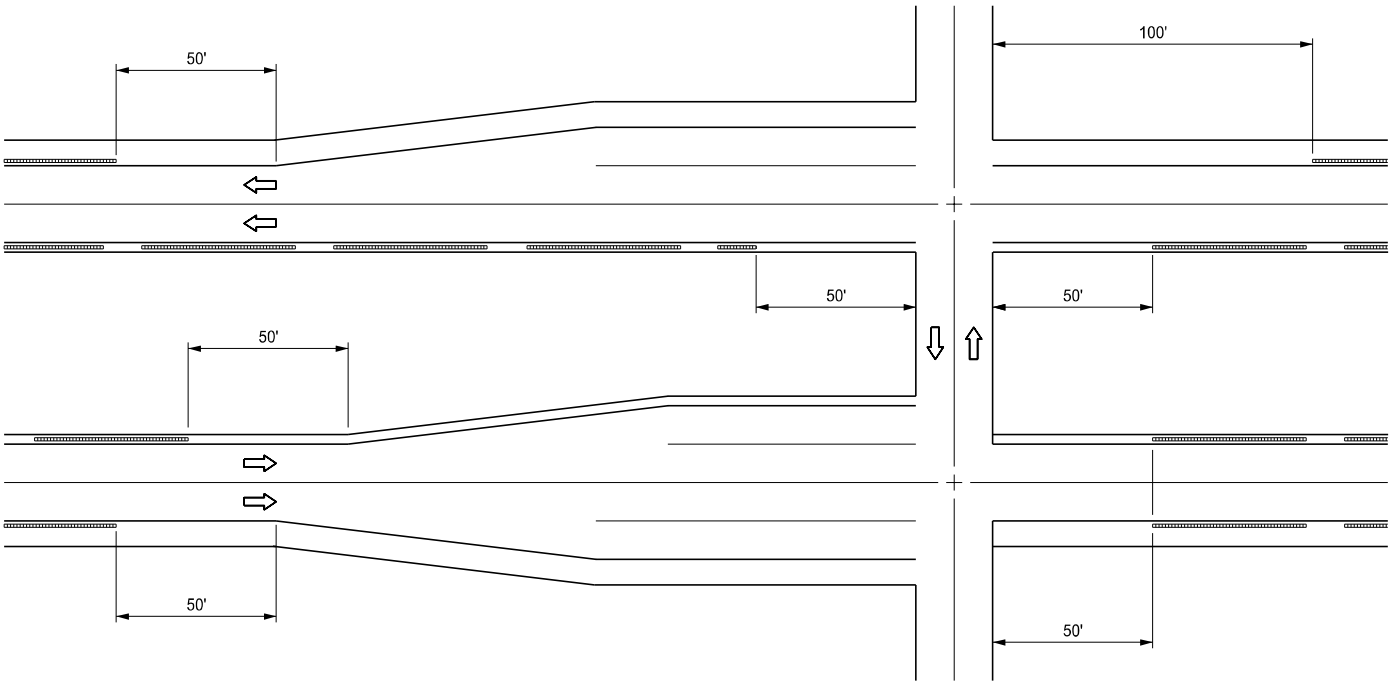


SHOULDER CORRUGATIONS AT INTERSECTIONS

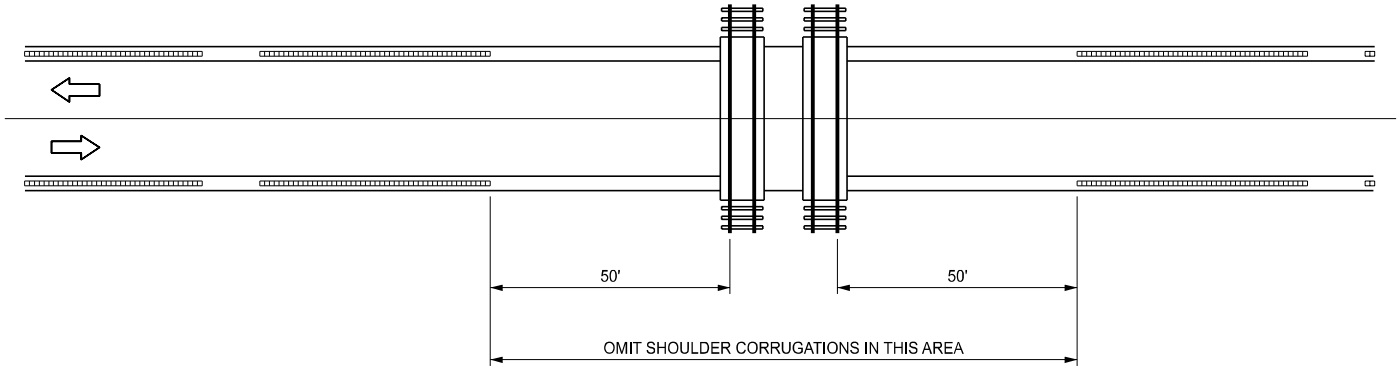


SHOULDER CORRUGATIONS AT RAILROADS

# NON-FREEWAY SHOULDER CORRUGATIONS

(FOR NON-FREEWAY SHOULDERS PAVED 6 FEET OR GREATER)

| | | | | |
|---|---|---|---|---|
| MDOT Michigan Department of Transportation<br>DEPARTMENT DIRECTOR<br>BRADLEY C. WIEFERICH, PE | STANDARD PLAN FOR<br>SHOULDER AND CENTER LINE CORRUGATIONS | | | |
| | 12/18/2024<br>FHWA APPROVAL | 05/16/2024<br>PLAN DATE | R-112-J | SHEET<br>6 OF 10 |

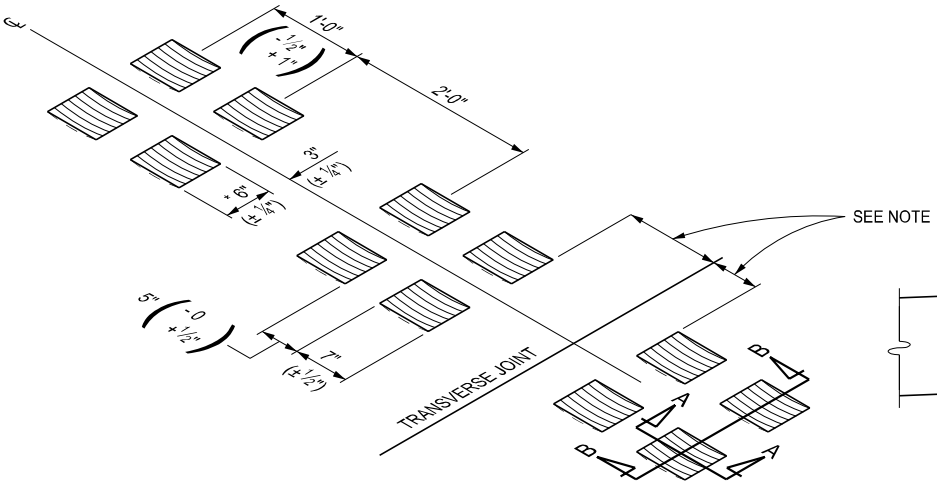


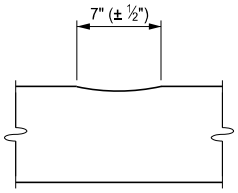


SECTION A-A

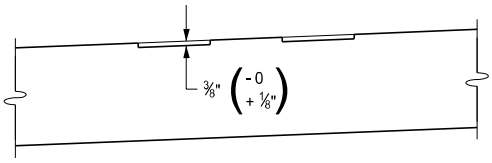


SECTION B-B
SUPERELEVATED ROADWAY

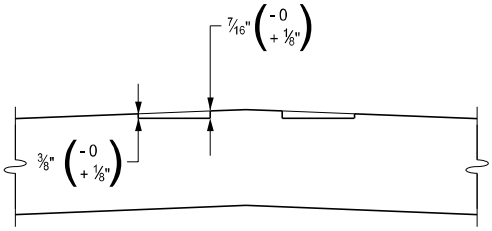


SECTION B-B
CROWNED ROADWAY

## TYPICAL NON-FREEWAY CENTER LINE CORRUGATION INSTALLATION FOR CONCRETE PAVEMENT

* DO NOT EXCEED A LATERAL DEVIATION OF 1" IN 100'.

NOTES:

ENSURE THE DISTANCE FROM THE CENTER LINE CORRUGATION TO THE TRANSVERSE JOINT IS AT LEAST 6" BUT LESS THAN 12" ON CONRETE PAVEMENTS.

CORRUGATIONS MAY BE CONSTRUCTED IN TWO PASSES AND THEREFORE MAY NOT BE SYMMETRICAL ACROSS THE CENTER LINE OF CONCRETE PAVEMENTS.

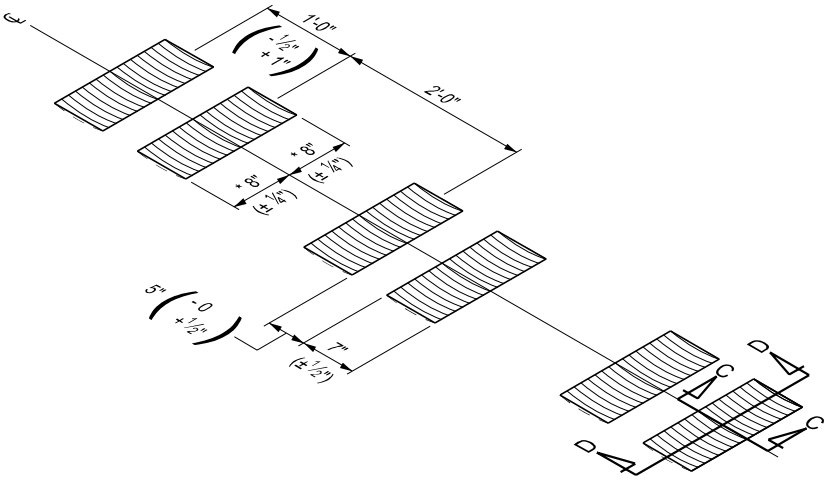


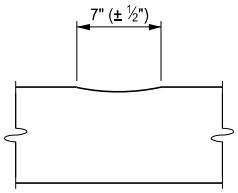


SECTION C-C

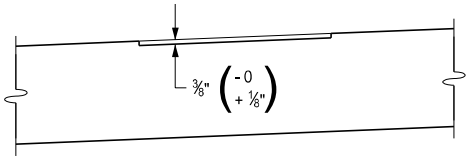


SECTION D-D
SUPERELEVATED ROADWAY

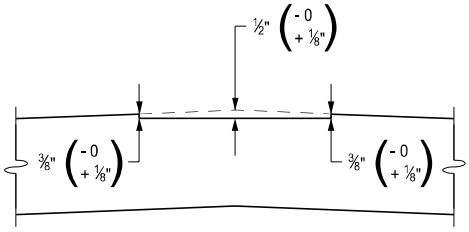


SECTION D-D
CROWNED ROADWAY

## TYPICAL NON-FREEWAY CENTER LINE CORRUGATION INSTALLATION FOR HMA PAVEMENT

* DO NOT EXCEED A LATERAL DEVIATION OF 1" IN 100'.

# NON-FREEWAY CENTER LINE CORRUGATIONS

| | | | | |
|---|---|---|---|---|
| MDOT Michigan Department of Transportation | STANDARD PLAN FOR SHOULDER AND CENTER LINE CORRUGATIONS | | | |
| DEPARTMENT DIRECTOR BRADLEY C. WIEFERICH, PE | 12/18/2024 FHWA APPROVAL | 05/16/2024 PLAN DATE | R-112-J | SHEET 7 OF 10 |

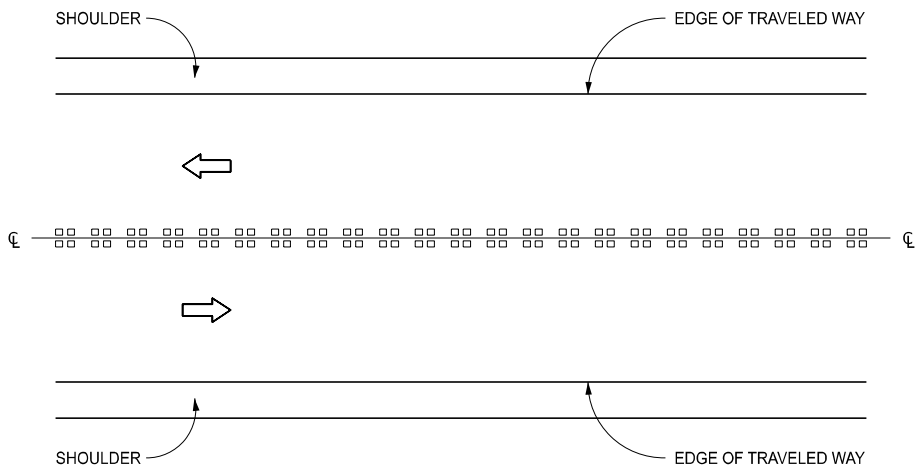


CENTER LINE CORRUGATIONS ON TWO-WAY ROADWAYS

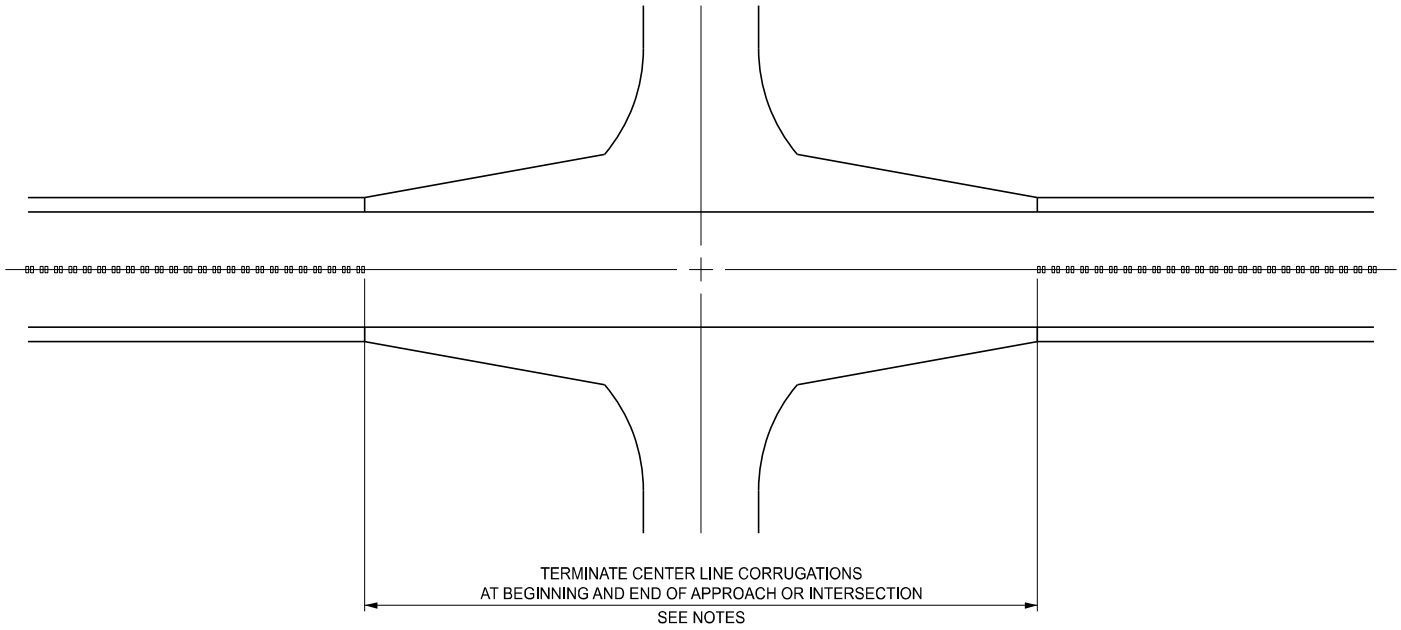


CENTER LINE CORRUGATIONS AT INTERSECTIONS

# NON-FREEWAY CENTER LINE CORRUGATIONS

| | | | | |
|---|---|---|---|---|
| MDOT Michigan Department of Transportation<br>DEPARTMENT DIRECTOR<br>BRADLEY C. WIEFERICH, PE | STANDARD PLAN FOR<br>SHOULDER AND CENTER LINE CORRUGATIONS | | | |
| | 12/18/2024<br>FHWA APPROVAL | 05/16/2024<br>PLAN DATE | R-112-J | SHEET<br>8 OF 10 |

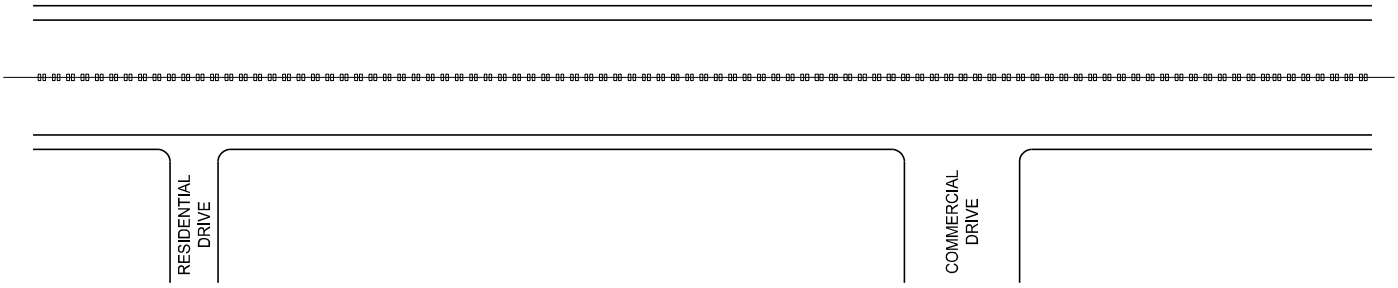


CENTER LINE CORRUGATIONS AT DRIVEWAYS

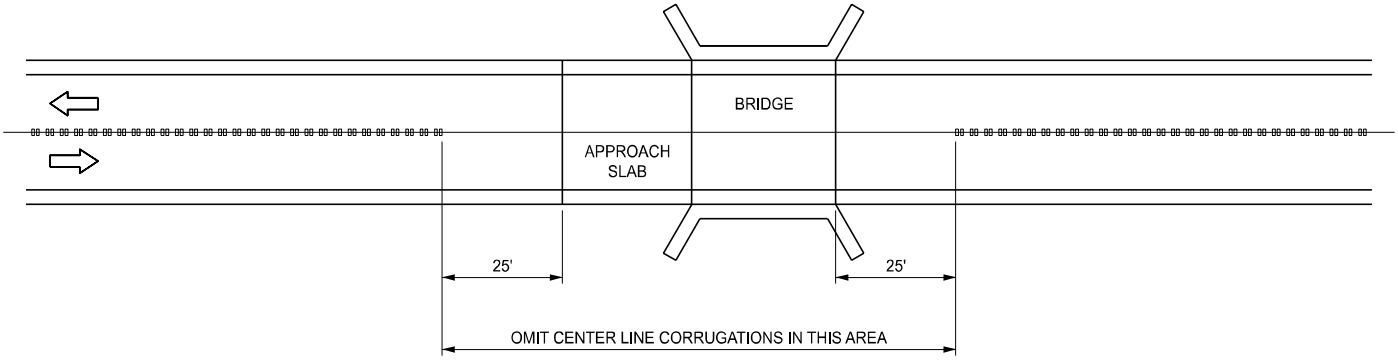


CENTER LINE CORRUGATIONS AT BRIDGES

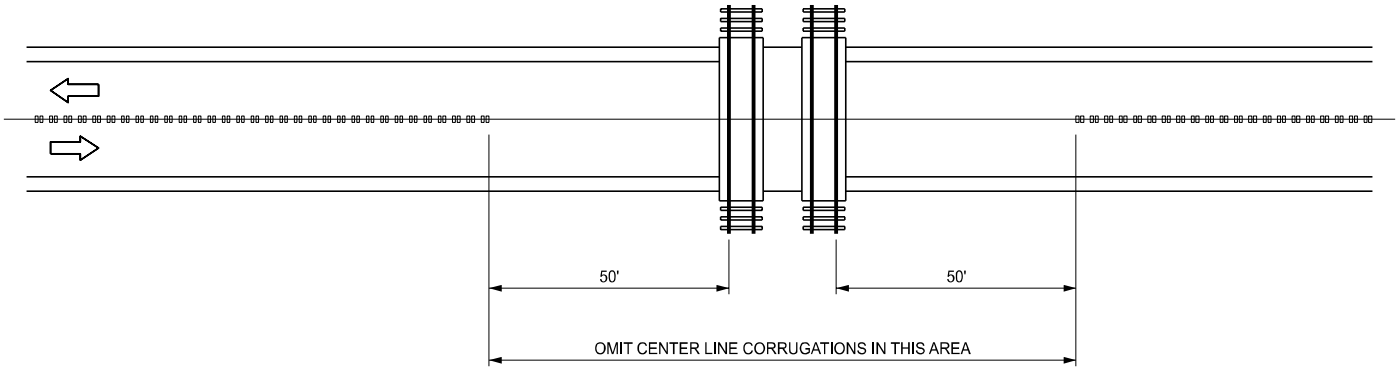


CENTER LINE CORRUGATIONS AT RAILROADS

# NON-FREEWAY CENTER LINE CORRUGATIONS

| | | | | |
|---|---|---|---|---|
| MDOT Michigan Department of Transportation<br>DEPARTMENT DIRECTOR<br>BRADLEY C. WIEFERICH, PE | STANDARD PLAN FOR<br>SHOULDER AND CENTER LINE CORRUGATIONS | | | |
| | 12/18/2024<br>FHWA APPROVAL | 05/16/2024<br>PLAN DATE | R-112-J | SHEET<br>9 OF 10 |

NOTES: (NON-FREEWAY)

THIS STANDARD SPECIFIES HOW SHOULDER CORRUGATION CROSS-SECTIONS AND LOCATIONS ARE TO BE DETAILED. USE CORRUGATIONS ON NON-FREEWAY SHOULDERS (CONCRETE AND HMA) WHICH ARE PAVED AT LEAST 6'-0" WIDE WHEN THE POSTED SPEED IS 55 MPH. USE THE CORRUGATIONS (SPECIFIED ON THIS STANDARD) IN OTHER LOCATIONS WHERE THEY HAVE BEEN PREVIOUSLY APPROVED.

DO NOT PLACE CORRUGATIONS OVER TRANSVERSE SHOULDER JOINTS.

DO NOT MILL SHOULDER OR CENTER LINE CORRUGATIONS THROUGH ANY INTERSECTION, MARKED CROSSWALK, NON-MOTORIZED PATH CROSSING, OR SNOWMOBILE CROSSING.

NOTES: (FREEWAY)

THIS STANDARD SPECIFIES HOW SHOULDER CORRUGATION CROSS-SECTIONS AND LOCATIONS ARE TO BE DETAILED. USE CORRUGATIONS ON FREEWAY SHOULDERS (CONCRETE AND HMA) PAVED AT LEAST 4'-0" WIDE OR WHERE THE SHOULDER LIES BETWEEN THE PAVEMENT AND VALLEY GUTTER OR CURB AND GUTTER. DO NOT USE CORRUGATIONS ON THE SHOULDERS OF FREEWAY EXIT/ENTRANCE RAMPS OR ON SHOULDERS THAT ARE SEPARATED FROM THE PAVEMENT BY VALLEY GUTTER OR CURB AND GUTTER. USE CORRUGATIONS ON FREEWAY TO FREEWAY RAMPS WITH THE EXCEPTION OF LOOP RAMPS.

DO NOT PLACE CORRUGATIONS OVER TRANSVERSE SHOULDER JOINTS.

LOCATE CORRUGATIONS IN THE AREA OF FREEWAY RAMPS AS FOLLOWS: INCREASE THE TYPICAL OFFSET TO 24" ON THE SHOULDER SIDE OF THE JOINT, BEGINNING 300' IN ADVANCE OF THE EXIT RAMP TAPER. CONTINUE THIS OFFSET UNTIL THE 2' POINT OF THE GORE. END CORRUGATIONS ALONG THE RAMP AT THIS POINT AND SIMULTANEOUSLY RESUME ON THE MAINLINE SHOULDER AND GORE WITH THE NORMAL OFFSET. USE THE SAME CONFIGURATION FOR ENTRANCE RAMPS, BUT IN THE REVERSE ORDER. FOR FREEWAY TO FREEWAY RAMPS, IN ADDITION TO RESUMING THE MAINLINE SHOULDER CORRUGATION, RETURN TO THE NORMAL MAINLINE OFFSET ALONG THE LENGTH OF THE RAMP SHOULDER.

WITHIN AN URBAN FREEWAY OR OTHER LIMITED FREEWAY AREA, OFFSET THE SHOULDER CORRUGATIONS UP TO 12" FROM THE EDGE OF THE TRAVEL LANE, OR AS SHOWN IN THE PLANS, OR AS DIRECTED BY THE ENGINEER. IF NEEDED, LOCATE THE CORRUGATION ON THE OPPOSITE SIDE OF THE JOINT FOR 14' LANES TO MAINTAIN THE MINIMUM OFFSET TO THE JOINT.

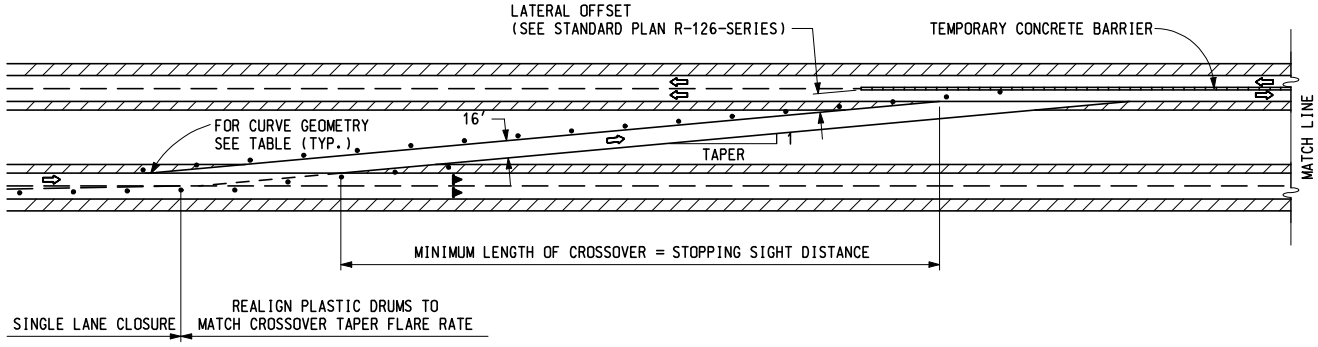


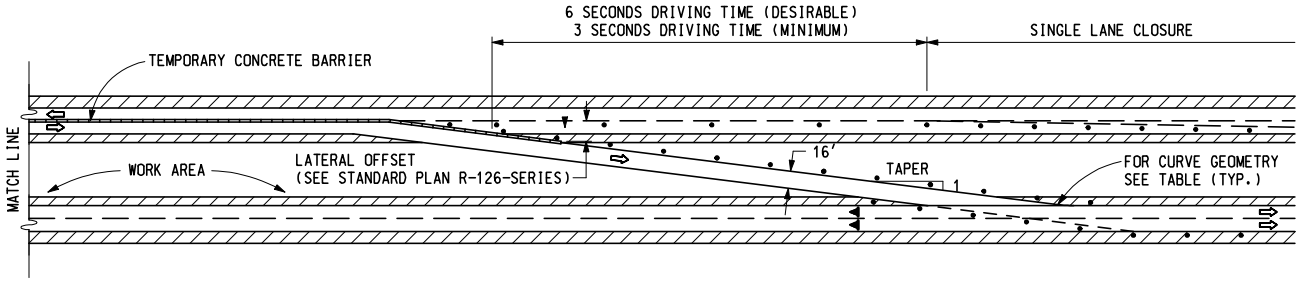


## ONE LANE CROSSOVER

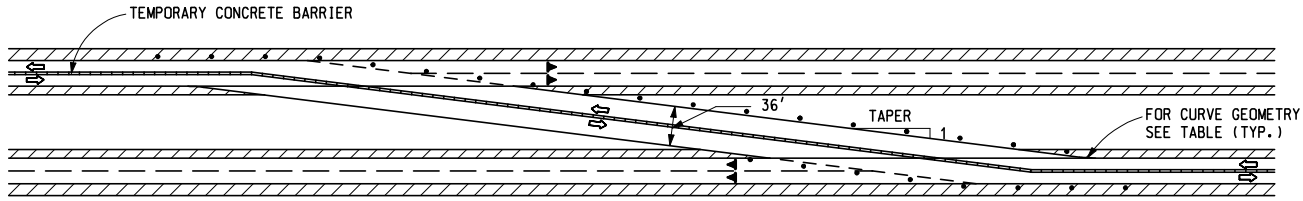


## TWO LANE, TWO - WAY CROSSOVER

**LEGEND**

- • PLASTIC DRUM
- ▶ TYPE III BARRICADE

| CROSSOVER TAPER GEOMETRY | | |
|---|---|---|
| DESIGN SPEED ( MPH ) | MAXIMUM DEFLECTION ( TAPER ) | MINIMUM RADIUS ( FEET ) |
| 30 | 8 : 1 | 955 |
| 40 | 11 : 1 | 1910 |
| 50 | 14 : 1 | 2865 |
| 60 | 17 : 1 | 3370 |
| 70 | 20 : 1 | 3820 |

NOTES:

CROSSOVERS SHALL BE LOCATED TO PROVIDE THE MAXIMUM ADVANCE WARNING TO THE DRIVER BASED ON THE VERTICAL AND HORIZONTAL ALIGNMENTS AT THE SITE.

VEHICLES MUST BE PROTECTED FROM THE BLUNT END OF BARRIERS. PREFERABLY, CONNECT THE TEMPORARY CONCRETE BARRIER TO THE EXISTING MEDIAN BARRIER OR PLACE AS SPECIFIED ON STANDARD PLAN R-126-SERIES.

ON A TWO-WAY CROSSOVER, A TAPER FLATTER THAN SPECIFIED IN THE TABLE IS TO BE USED IF PRACTICAL.

THE MAXIMUM DEFLECTION (TAPER) SHALL BE DETERMINED FROM THE TABLE AS A FUNCTION OF SPEED.

SUPERELEVATION IS NOT REQUIRED FOR THE SPEEDS AND RADII OF THE CURVES GIVEN.

IN WIDE MEDIANS, ALIGNMENT MAY BE DESIGNED INTO THE CROSSOVER TO SHORTEN ITS LENGTH SUBJECT TO THE MINIMUM RADIUS SPECIFIED, WITH THE APPROVAL OF THE ENGINEER. ANY PROPOSED RADIUS WHICH IS LESS THAN THAT SPECIFIED IN THE TABLE SHALL BE REVIEWED BY THE TRAFFIC AND SAFETY SUPPORT AREA FOR DESIGN FEATURES SUCH AS SUPERELEVATION, DEFLECTION, AND REVERSE ALIGNMENT.

PLASTIC DRUMS SHALL BE OFFSET FROM THE LINE OF TRAVEL 2'-0" MINIMUM. THEY MAY BE ALIGNED BY EYE.

TRAFFIC CONTROL DEVICES AND PAVEMENT MARKINGS SHALL BE ACCORDING TO THE "MICHIGAN MANUAL OF UNIFORM TRAFFIC CONTROL DEVICES".

FOR STOPPING SIGHT DISTANCE, REFER TO THE CURRENT EDITION OF THE AASHTO PUBLICATION "A POLICY ON GEOMETRIC DESIGN OF HIGHWAY AND STREETS."

FOR SPECIFIC CHANNELIZATION TREATMENTS, SEE THE TRAFFIC AND SAFETY SUPPORT AREA.

THE MINIMUM DESIGN SPEED FOR CROSSOVERS SHOULD BE 10 MPH BELOW THE POSTED SPEED PRIOR TO CONSTRUCTION, UNLESS UNUSUAL SITE CONDITIONS REQUIRE THAT A LOWER DESIGN SPEED BE USED.

MDOT Michigan Department of Transportation

PREPARED BY DESIGN SUPPORT AREA

DRAWN BY: B.L.T.

CHECKED BY: W.K.P.

ENGINEER OF CONSTRUCTION & TECHNOLOGY

ENGINEER OF MAINTENANCE

ENGINEER OF TRAFFIC AND SAFETY

ENGINEER OF DESIGN SUPPORT AREA

DEPARTMENT DIRECTOR
Gloria J. Jeff

ENGINEER OF DEVELOPMENT

MICHIGAN DEPARTMENT OF TRANSPORTATION
BUREAU OF HIGHWAY DEVELOPMENT STANDARD PLAN FOR

# TEMPORARY CROSSOVERS FOR DIVIDED ROADWAYS

| 10-27-2004 | 4-16-2004 | R-113-C | SHEET 1 OF 2 |
|---|---|---|---|
| F.H.W.A. APPROVAL | PLAN DATE | | |

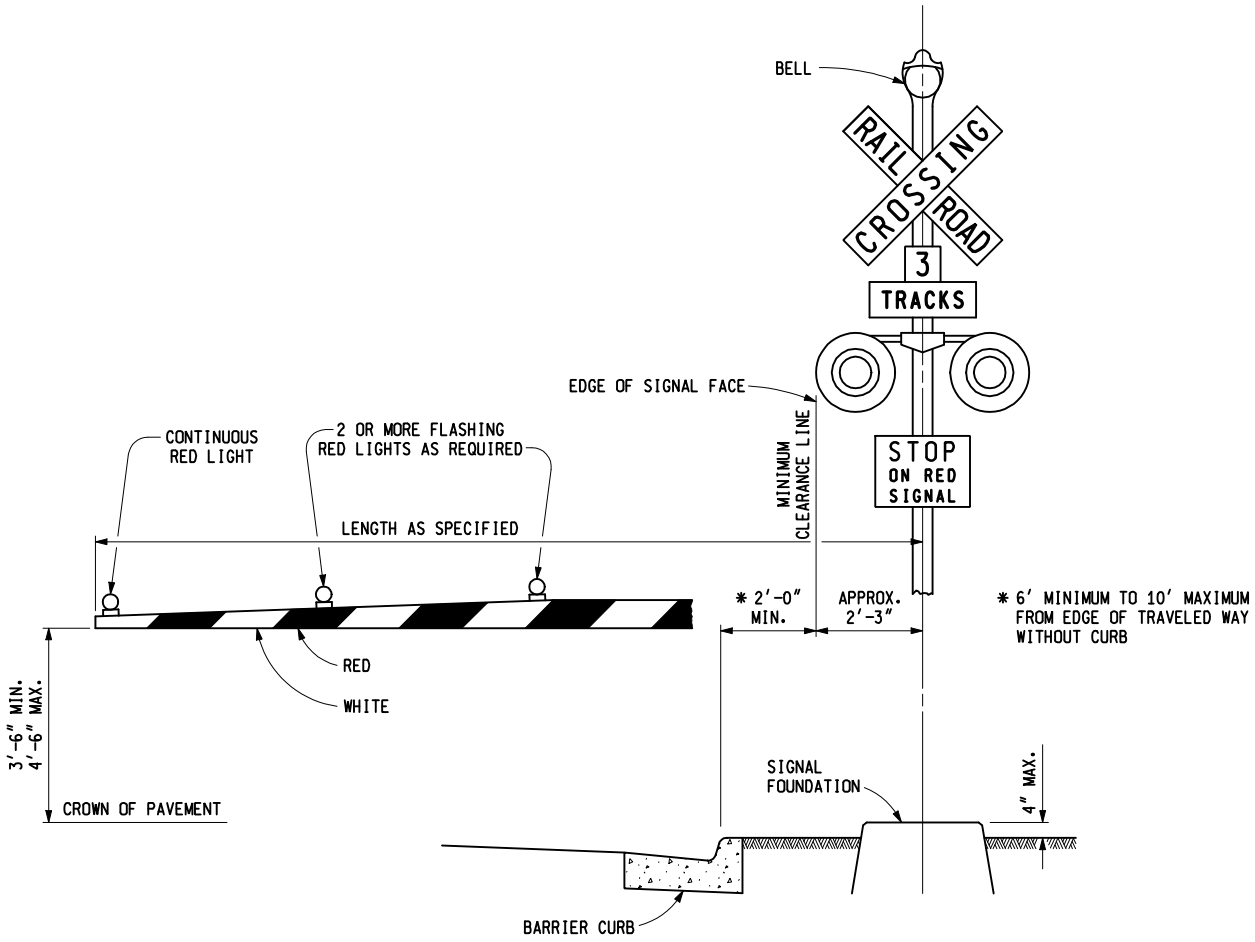


# FLASHER WITH HALF ROAD GATE

NOTES:

SIGNALS AND GATE ASSEMBLIES SHALL BE ACCORDING TO THE RULES AND REGULATIONS OF THE STATE OF MICHIGAN AND SHALL CONFORM TO THE CURRENT RECOMMENDED PRACTICES OF THE ASSOCIATION OF AMERICAN RAILROADS AND THE AMERICAN RAILWAY ENGINEERING ASSOCIATION EXCEPT AS OTHERWISE PROVIDED BY INDIVIDUAL MICHIGAN ORDERS.

SIGNS ON SUCH ASSEMBLIES SHALL BE BLACK LEGENDS ON WHITE BACKGROUND AND CONFORM TO THE MICHIGAN MANUAL OF UNIFORM TRAFFIC CONTROL DEVICES REQUIREMENTS FOR RAILROAD CROSSING SIGNS.

GATE ARMS MAY BE MOUNTED ON SEPARATE POSTS.

CURB AND GUTTER ADJACENT TO SIGNAL SHALL BE BARRIER TYPE. ROLL CURB SHALL NOT BE USED. CONCRETE CURB AND GUTTER ENDING SHALL BE INSTALLED ACCORDING TO STANDARD PLANS R-30-SERIES AND R-121-SERIES.

A LONGITUDINAL GUARDRAIL SHOULD NOT BE USED TO PROTECT TRAFFIC CONTROL DEVICES AT THE CROSSING UNLESS THE GUARDRAIL IS OTHERWISE WARRANTED, AS FOR A STEEP EMBANKMENT.

MICHIGAN DEPARTMENT OF TRANSPORTATION
BUREAU OF HIGHWAY DEVELOPMENT STANDARD PLAN FOR

## RAILROAD CROSSING SIGNALS

| 9-16-2009 | 8-14-2008 | R-122-C | SHEET |
|---|---|---|---|
| F.H.W.A. APPROVAL | PLAN DATE | | 2 OF 2 |

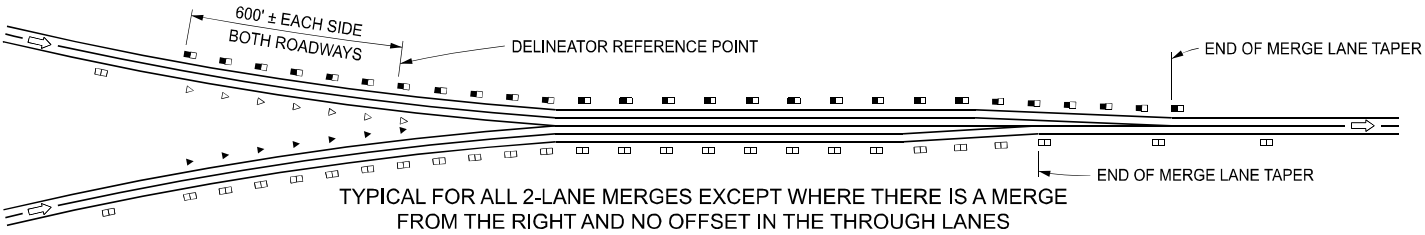


TYPICAL FOR ALL 2-LANE MERGES EXCEPT WHERE THERE IS A MERGE FROM THE RIGHT AND NO OFFSET IN THE THROUGH LANES

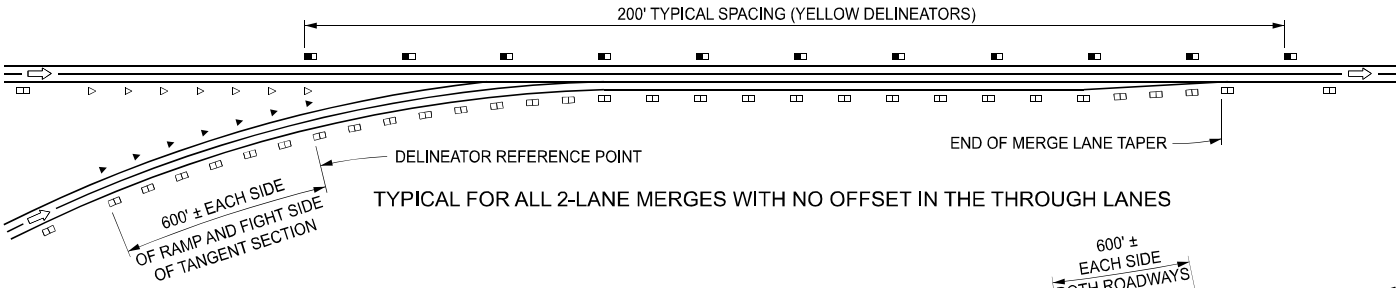


TYPICAL FOR ALL 2-LANE MERGES WITH NO OFFSET IN THE THROUGH LANES

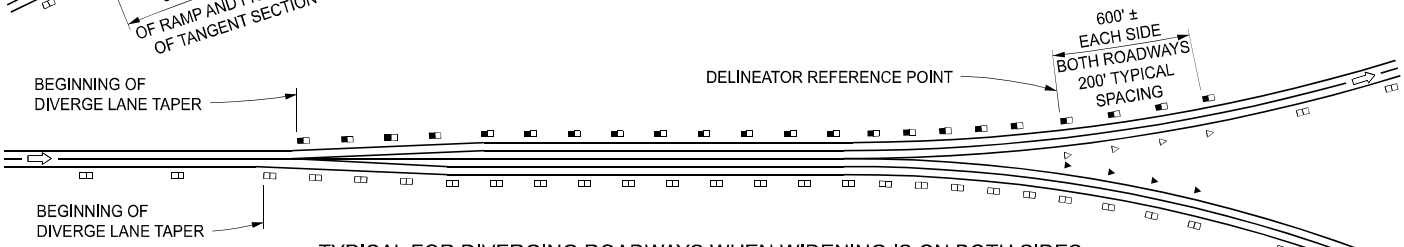


TYPICAL FOR DIVERGING ROADWAYS WHEN WIDENING IS ON BOTH SIDES

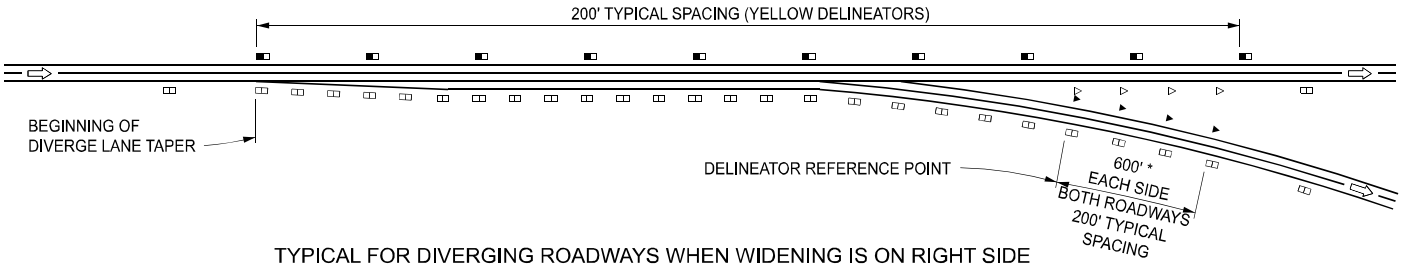


TYPICAL FOR DIVERGING ROADWAYS WHEN WIDENING IS ON RIGHT SIDE

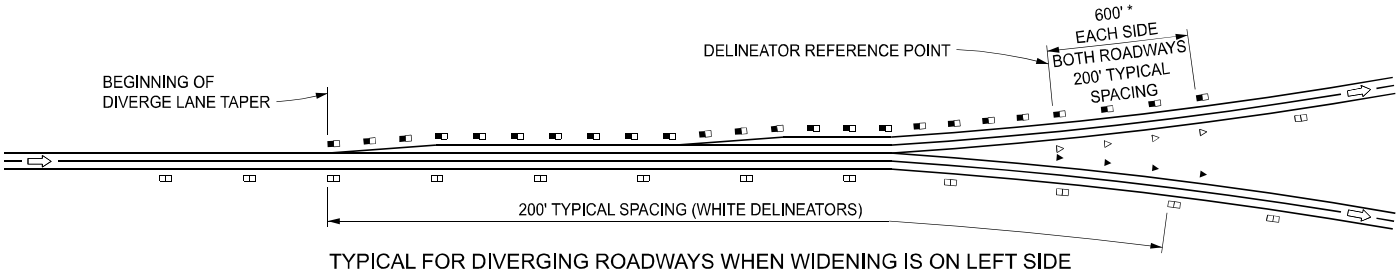


TYPICAL FOR DIVERGING ROADWAYS WHEN WIDENING IS ON LEFT SIDE

## DELINEATION OF FREEWAY TO FREEWAY CONNECTIONS

* PLACE DELINEATOR 14' FROM THE EDGE OF THE TRAVELED WAY WHEN THE PAVED SHOULDER WIDTH IS 12'. INCREASE THE PAVED GORE WIDTH TO 24'.

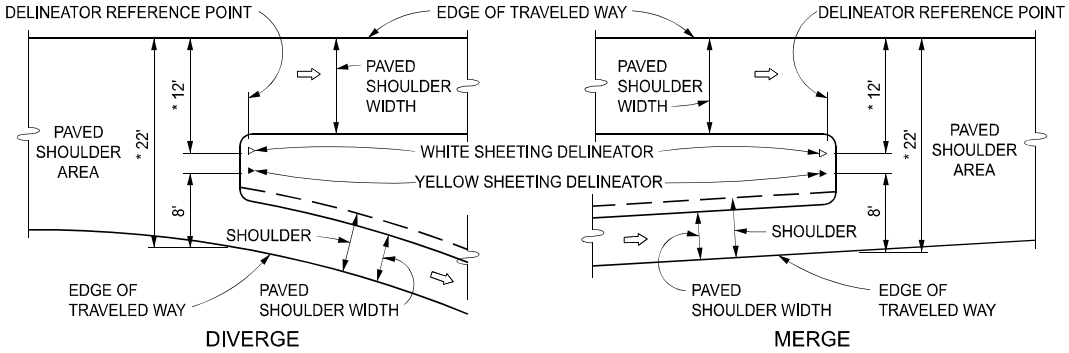


## DELINEATOR REFERENCE POINTS FOR NORMAL 10' SHOULDERS
## ( 9' OR 10' PAVED )

| | | | |
|---|---|---|---|
| APPROVED BY: E-SIGNED by JASON GUTTING on 2024-09-24 12:57:09 EDT<br>DIRECTOR, BUREAU OF FIELD SERVICES | MDOT Michigan Department of Transportation | STANDARD PLAN FOR<br>DELINEATOR INSTALLATIONS | |
| APPROVED BY: E-SIGNED by Demetrius Parker on 2024-09-24 09:52:29 EDT<br>DIRECTOR, BUREAU OF DEVELOPMENT | DEPARTMENT DIRECTOR<br>BRADLEY C. WIEFERICH, PE | 12/18/2024 FHWA APPROVAL<br>05/13/2024 PLAN DATE | R-127-H | SHEET 1 OF 8 |

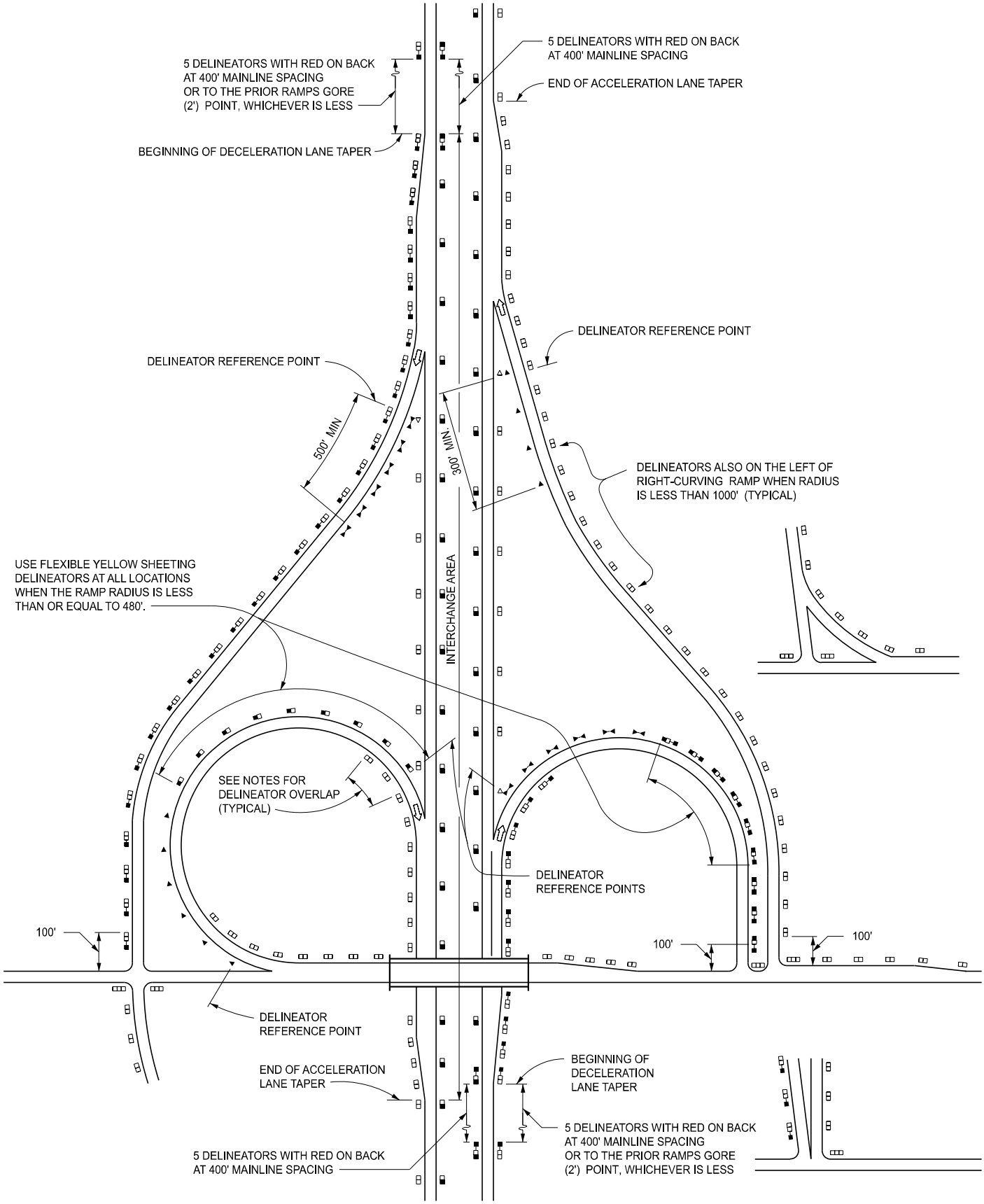


INTERCHANGE DELINEATION

MDOT
Michigan Department of Transportation

DEPARTMENT DIRECTOR
BRADLEY C. WIEFERICH, PE

STANDARD PLAN FOR
DELINEATOR INSTALLATIONS

| 12/18/2024 | 05/13/2024 | R-127-H | SHEET |
|---|---|---|---|
| FHWA APPROVAL | PLAN DATE | | 2 OF 8 |

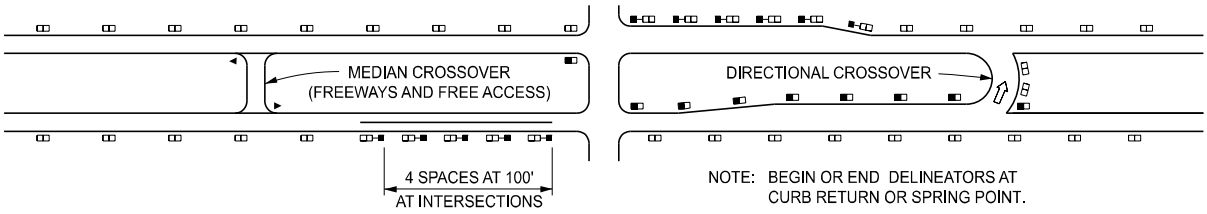


DIVIDED HIGHWAY & MEDIAN CROSSOVER

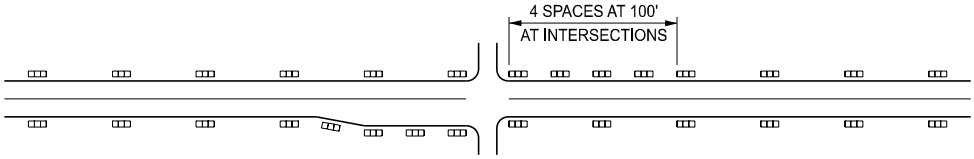


RURAL TWO-LANE TWO-WAY ROADWAYS (OPTIONAL)

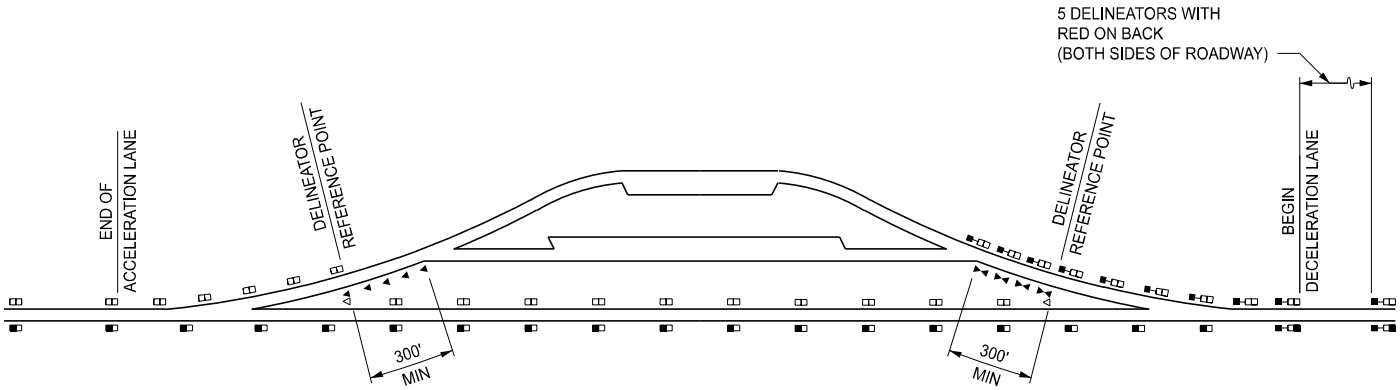


REST AREA & WEIGH STATION

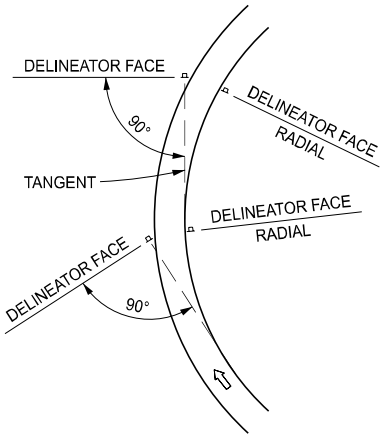


DELINEATOR ORIENTATION
ON HORIZONTAL CURVES
FOR ONE WAY TRAFFIC

| | | | | |
|---|---|---|---|---|
| MDOT Michigan Department of Transportation | STANDARD PLAN FOR DELINEATOR INSTALLATIONS | | | |
| DEPARTMENT DIRECTOR BRADLEY C. WIEFERICH, PE | 12/18/2024 FHWA APPROVAL | 05/13/2024 PLAN DATE | R-127-H | SHEET 3 OF 8 |

## LEGEND

### DELINEATORS INSTALLED ON RIGID STEEL POSTS

WHITE PANEL DELINEATORS:
- 400' MAXIMUM SPACING ON TANGENT AND CURVES WITH A RADIUS GREATER THAN 3500'
- 200' MAXIMUM SPACING IN INTERCHANGE AREAS
- 100' MAXIMUM SPACING ON INTERCHANGE RAMPS

YELLOW PANEL DELINEATORS:
- 200' MAXIMUM SPACING IN MERGE OR DIVERGE AREAS OF MAJOR ROADWAYS
- 100' MAXIMUM SPACING ON INTERCHANGE RAMPS
- 400' MAXIMUM SPACING ON TANGENT & CURVES WITH A RADIUS >3500' (FREEWAYS & DIVIDED HIGHWAYS WITH POSTED SPEEDS ≥ 55 MPH)
- 200' MAXIMUM SPACING IN INTERCHANGE AREAS (FREEWAYS & DIVIDED HIGHWAYS WITH POSTED SPEEDS ≥ 55 MPH)

BACK TO BACK WHITE PANEL DELINEATORS:
- 400' MAXIMUM SPACING ON TANGENT AND CURVES WITH A RADIUS GREATER THAN 3500'
- 100' MAXIMUM SPACING ALONG RIGHT TURN LANES

RED PANEL DELINEATORS ON BACK OF WHITE PANEL DELINEATORS

RED PANEL DELINEATORS ON BACK OF YELLOW PANEL DELINEATORS

GREEN PANEL DELINEATORS

### DELINEATORS INSTALLED ON FLEXIBLE POSTS

3" x 12" WHITE SHEETING DELINEATORS:
- 200' MAXIMUM SPACING IN INTERCHANGE AREAS
- 100' MAXIMUM SPACING ON INTERCHANGE RAMPS

3" x 12" YELLOW SHEETING DELINEATORS:
- 200' MAXIMUM SPACING IN MERGE OR DIVERGE AREAS OF MAJOR ROADWAYS
- 100' MAXIMUM SPACING ON INTERCHANGE RAMPS
- 200' MAXIMUM SPACING IN INTERCHANGE AREAS (FREEWAYS & DIVIDED HIGHWAYS WITH POSTED SPEEDS ≥ 55 MPH)

3" x 12" RED SHEETING ON BACK OF 3" x 12" WHITE SHEETING DELINEATORS

3" x 12" RED SHEETING ON BACK OF 3" x 12" YELLOW SHEETING DELINEATORS

BACK TO BACK 3" x 12" WHITE SHEETING DELINEATORS

NOTE:
USE THE VALUE THAT RESULTS IN CLOSER SPACING WHEN THE ABOVE SPACING CONFLICTS WITH THE CURVE CHARTS ON SHEET 5.

| CURVE RADIUS KNOWN | | | | |
|---|---|---|---|---|
| MIN RADIUS (R) OF CURVE (FT) | SPACING (S) ON CURVE (FT) | SPACING BEFORE/AFTER CURVE | | |
| | | 2S | 3S | 6S |
| 50 | 20 | 40 | 60 | 120 |
| 150 | 30 | 60 | 90 | 180 |
| 230 | 40 | 80 | 120 | 240 |
| 325 | 50 | 100 | 150 | 300 |
| 450 | 60 | 120 | 180 | 300 |
| 595 | 70 | 140 | 210 | 300 |
| 760 | 80 | 160 | 240 | 300 |
| 950 | 90 | 180 | 270 | 300 |
| 1160 | 100 | 200 | 300 | 300 |
| 1395 | 110 | 220 | 300 | 300 |
| 1650 | 120 | 240 | 300 | 300 |
| 1930 | 130 | 260 | 300 | 300 |
| 2230 | 140 | 280 | 300 | 300 |
| 2550 | 150 | 300 | 300 | 300 |
| 2895 | 160 | 300 | 300 | 300 |
| 3260 | 170 | 300 | 300 | 300 |
| 3650 | 180 | 300 | 300 | 300 |
| 4060 | 190 | 300 | 300 | 300 |
| 4495 | 200 | 300 | 300 | 300 |
| 4950 | 210 | 300 | 300 | 300 |
| 5430 | 220 | 300 | 300 | 300 |
| 5930 | 230 | 300 | 300 | 300 |
| 6450 | 240 | 300 | 300 | 300 |
| 6995 | 250 | 300 | 300 | 300 |
| 7560 | 260 | 300 | 300 | 300 |
| 8150 | 270 | 300 | 300 | 300 |
| 8760 | 280 | 300 | 300 | 300 |
| 9395 | 290 | 300 | 300 | 300 |
| 10,050 - 17,830 | 300 | 300 | 300 | 300 |
| > 17,830 | NORMAL SPACING | | | |

USE THE FORMULA $S = 3\sqrt{R - 50}$ TO FIND THE SPACING "S", WHERE R IS THE RADIUS OF THE CURVE IN FEET.

| CURVE RADIUS UNKNOWN | | | | |
|---|---|---|---|---|
| CURVE ADVISORY SPEED (MPH)* | SPACING (S) ON CURVE (FT) | SPACING BEFORE/AFTER CURVE | | |
| | | 2S | 3S | 6S |
| < 25 | 25 | 50 | 75 | 150 |
| 25 | 40 | 80 | 120 | 240 |
| 30 | 50 | 100 | 150 | 300 |
| 35 | 60 | 120 | 180 | 300 |
| 40 | 70 | 140 | 210 | 300 |
| 45 | 80 | 160 | 240 | 300 |
| 50 | 90 | 180 | 270 | 300 |
| 55 | 100 | 200 | 300 | 300 |
| 60 | 115 | 230 | 300 | 300 |
| 65 | 130 | 260 | 300 | 300 |
| 70 | 140 | 280 | 300 | 300 |
| 75 | 160 | 300 | 300 | 300 |

* POSTED OR STATUTORY SPEED LIMIT IF NO ADVISORY POSTED

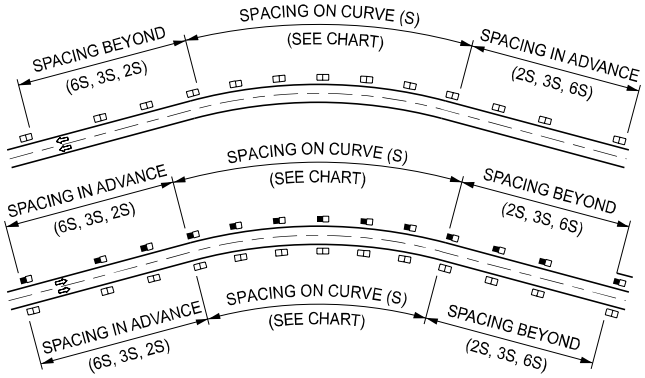


DELINEATOR LOCATION ON
FREEWAY AND DIVIDED ROADWAY CURVES

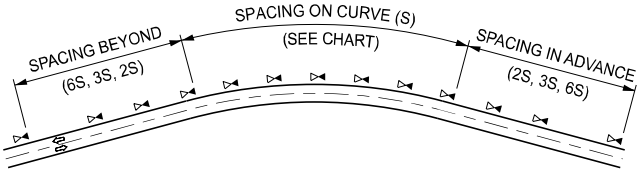


NOTE:
PLACE DELINEATORS ON TWO LANE, TWO WAY ROADWAY HORIZONTAL CURVES WITH A RADIUS OF 1900' OR LESS OR AS DIRECTED BY THE REGION/TSC TRAFFIC AND SAFETY ENGINEER.

INSTALL DELINEATOR FACE PERPENDICULAR (OR RADIAL) TO ROADWAY.

DELINEATOR LOCATION ON
TWO LANE TWO WAY ROADWAY CURVES

| GUARDRAIL APPROACH TERMINAL | DELINEATOR LOCATED 1 FOOT BEHIND |
|---|---|
| TYPE 1 | LAST POST (FROM APPROACH END) |
| TYPE 2 | FIRST POST (FROM APPROACH END) |

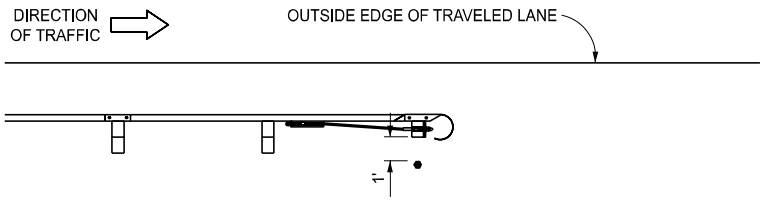


GUARDRAIL DEPARTING TERMINAL TYPES B, T, & MGS

GREEN DELINEATORS AT GUARDRAIL INSTALLATIONS

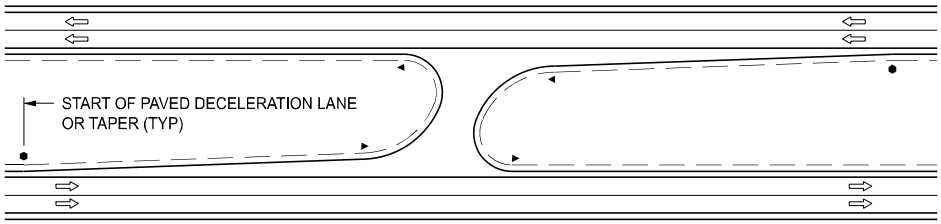


MAINTENANCE CROSSOVER

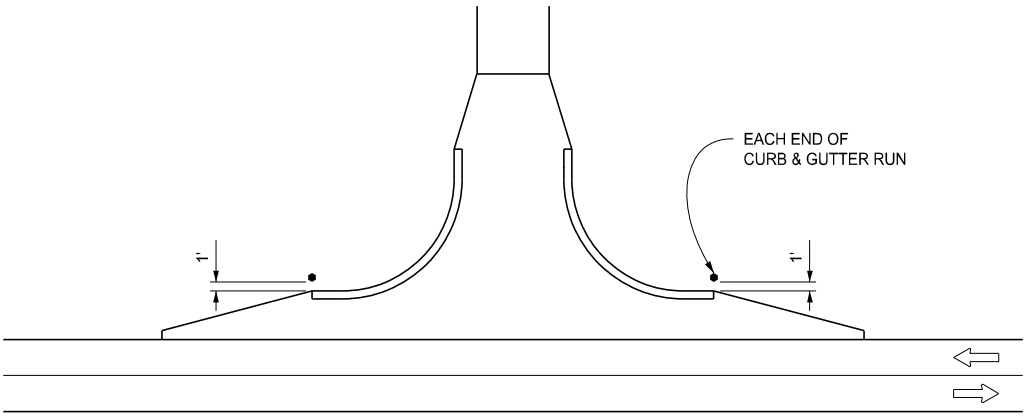


INTERSECTION

NOTE: OMIT DELINEATOR(S) AT FREEWAY RAMP TERMINALS WHEN THEY CONFLICT WITH OTHER DELINEATORS.

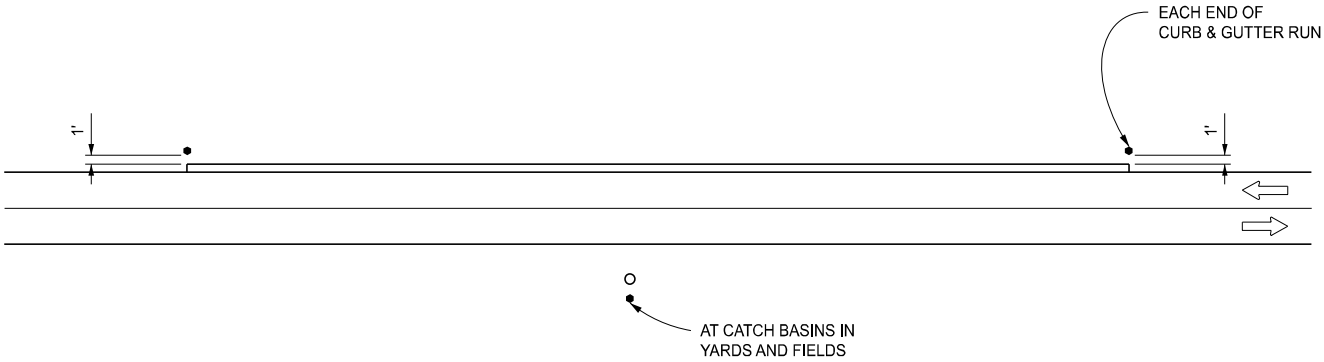


CURB & GUTTER AND CATCH BASINS

GREEN DELINEATOR LOCATIONS

| | | | | |
|---|---|---|---|---|
| MDOT Michigan Department of Transportation<br>DEPARTMENT DIRECTOR<br>BRADLEY C. WIEFERICH, PE | STANDARD PLAN FOR<br>DELINEATOR INSTALLATIONS | | | |
| | 12/18/2024<br>FHWA APPROVAL | 05/13/2024<br>PLAN DATE | R-127-H | SHEET<br>7 OF 8 |

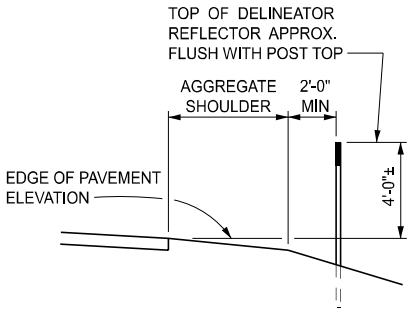


SHOULDER

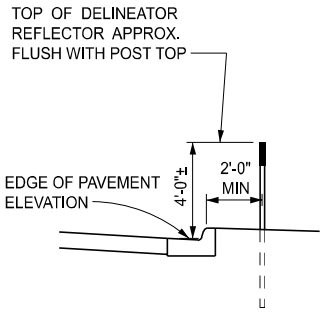


CURB

INSTALLATION OF
DELINEATOR REFLECTORS
ON RIGID STEEL POST

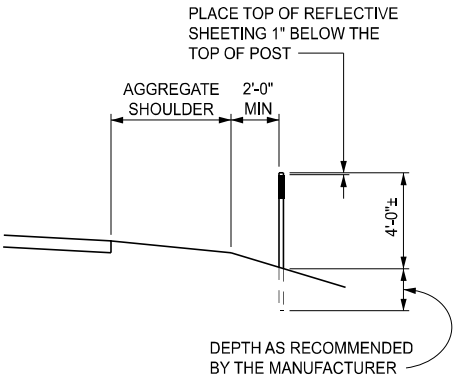


INSTALLATION OF
REFLECTIVE SHEETING
ON FLEXIBLE POST

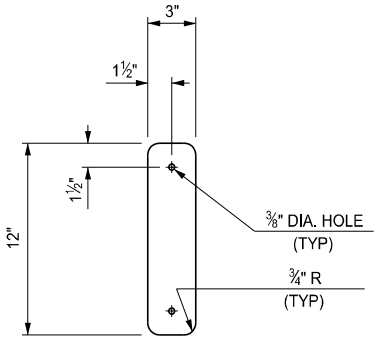


DELINEATOR REFLECTOR DETAIL

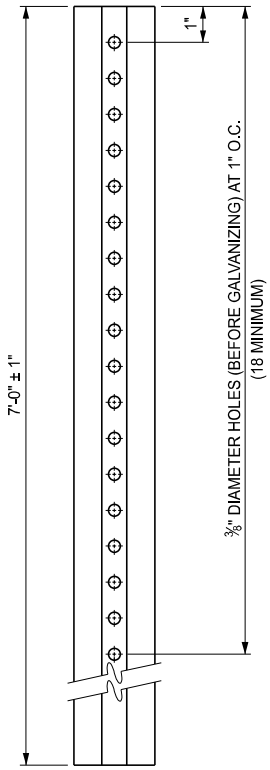


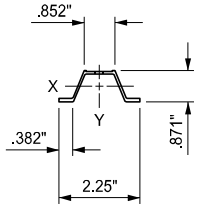


NOMINAL WEIGHT = 1.12 LBS/FT

MINIMUM MOMENT OF INERTIA ABOUT
X-X AXIS = 0.031 in.$^4$

RIGID STEEL POST DETAIL

NOTES:

PLACE DELINEATORS 2'-0" BEYOND THE AGGREGATE SHOULDER, 2'-0" BEYOND THE FACE OF A BARRIER CURB, IMMEDIATELY BEHIND THE GUARDRAIL POST, OR AS NEAR AS POSSIBLE BEHIND CONCRETE BARRIER. DO NOT PLACE DELINEATORS INSTALLED ON FLEXIBLE POSTS BEHIND GUARDRAIL.

INSTALL FLEXIBLE POST DELINEATORS ACCORDING TO THE STANDARD SPECIFICATIONS FOR CONSTRUCTION AND AT ALL LOCATIONS SPECIFIED ON THIS STANDARD PLAN, OR WHERE DIRECTED BY THE ENGINEER.

PLACE WHITE DELINEATORS ON THE RIGHT AND YELLOW DELINEATORS ON THE LEFT OF A RIGHT-CURVING RAMP WITH A RADIUS OF 1000' OR LESS.

USE AN OVERLAP OF TWO DELINEATOR INSTALLATIONS WHERE DELINEATION ON ONE SIDE OF THE ROADWAY OR RAMP ENDS AND DELINEATION ON THE OTHER SIDE BEGINS.

PLACE DELINEATORS ON ALL RAMPS AT RURAL INTERCHANGES WHETHER OR NOT THE INTERCHANGES ARE LIGHTED. OMIT DELINEATORS ALONG THE THROUGH ROADWAY BETWEEN INTERCHANGES WHERE FIXED SOURCE LIGHTING EXISTS.

CONTINUE DELINEATOR PLACEMENT WHERE GUARDRAIL OR CONCRETE BARRIER IS PRESENT. DO NOT PLACE DELINEATORS BEHIND GUARDRAIL APPROACH TERMINALS EXCEPT AS SHOWN ON SHEET 6 OF THIS STANDARD. INSTALL GUARDRAIL OR BARRIER MOUNTED ENHANCED DELINEATORS IF TERRAIN OR OTHER FACTORS PROHIBIT POST MOUNTED DELINEATORS.

ALTERNATE DELINEATOR LOCATION METHOD:
LOCATE THE FIRST DELINEATOR ON EACH SIDE OF THE ROADWAY FROM THE AGGREGATE SHOULDER. GENERATE A NEW OFFSET REFERENCE BY MEASURING FROM THE LOCATED DELINEATOR TO THE STRIPED EDGELINE. USE THIS MEASUREMENT TO LOCATE OTHER DELINEATORS IN A CORRIDOR OF SIMILAR CROSS SECTION.

MDOT
Michigan Department of Transportation

DEPARTMENT DIRECTOR
BRADLEY C. WIEFERICH, PE

STANDARD PLAN FOR
DELINEATOR INSTALLATIONS

| 12/18/2024 | 05/13/2024 | R-127-H | SHEET |
|---|---|---|---|
| FHWA APPROVAL | PLAN DATE | | 8 OF 8 |

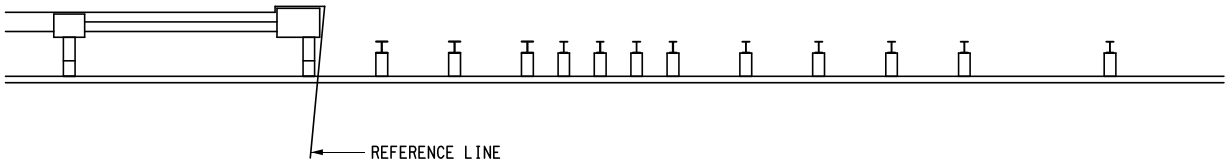


PLAN

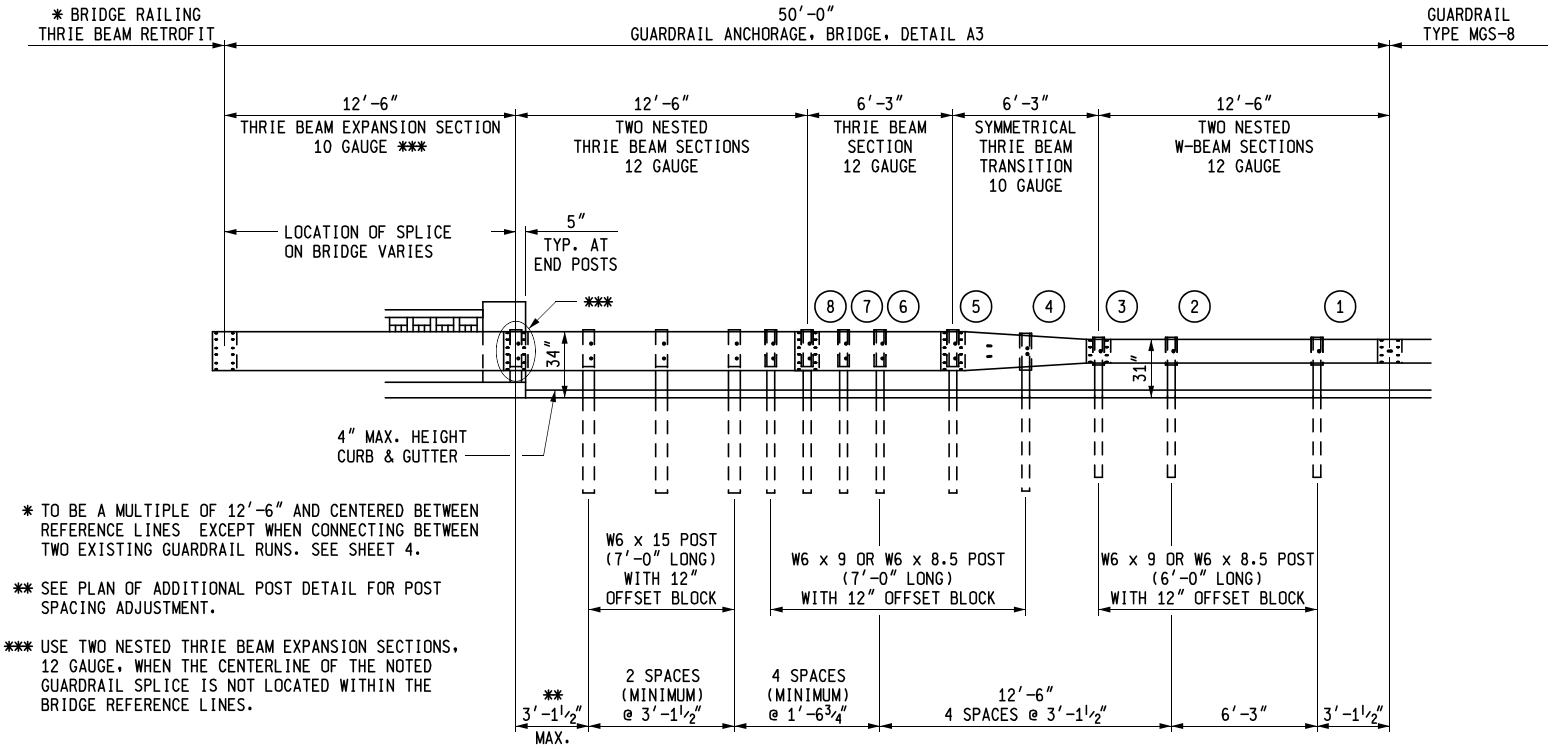


* TO BE A MULTIPLE OF 12'-6" AND CENTERED BETWEEN REFERENCE LINES EXCEPT WHEN CONNECTING BETWEEN TWO EXISTING GUARDRAIL RUNS. SEE SHEET 4.

** SEE PLAN OF ADDITIONAL POST DETAIL FOR POST SPACING ADJUSTMENT.

*** USE TWO NESTED THRIE BEAM EXPANSION SECTIONS, 12 GAUGE, WHEN THE CENTERLINE OF THE NOTED GUARDRAIL SPLICE IS NOT LOCATED WITHIN THE BRIDGE REFERENCE LINES.

ELEVATION

DETAILS FOR CONNECTING GUARDRAIL TYPE MGS-8 TO BRIDGE RAILING, THRIE BEAM RETROFIT

MICHIGAN DEPARTMENT OF TRANSPORTATION
BUREAU OF DEVELOPMENT STANDARD PLAN FOR

# BRIDGE RAILING, THRIE BEAM RETROFIT

(R4 TYPE BRIDGE RAILING)

| | |
|---|---|
| 4-7-2022 | F.H.W.A. APPROVAL |
| 10-23-2019 | PLAN DATE |
| B-22-E | SHEET 1 OF 5 |

DEPARTMENT DIRECTOR
Paul C. Ajegba

APPROVED BY: Matthew J. Chynoweth, P.E. — Matthew J. Chynoweth Oct 14 2021 4:27 PM
DIRECTOR, BUREAU OF BRIDGES AND STRUCTURES

APPROVED BY: Gregg Brunner, P.E. — Gregg Brunner Oct 14 2021 12:29 PM
DIRECTOR, BUREAU OF FIELD SERVICES

APPROVED BY: Bradley C. Wuebenich — Bradley C. Wuebenich Oct 14 2021 10:58 AM
DIRECTOR, BUREAU OF DEVELOPMENT

MDOT Michigan Department of Transportation

PREPARED BY DESIGN DIVISION

DRAWN BY: B.L.T.
CHECKED BY: V.Z.

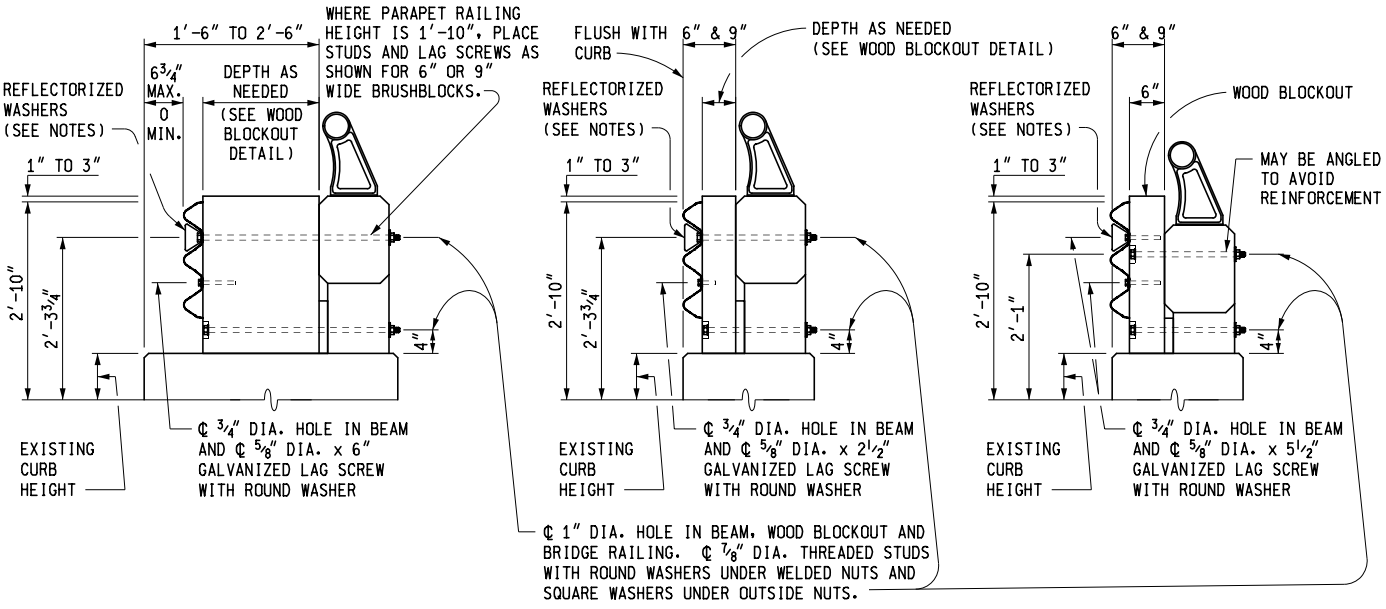


2'-3" HIGH PARAPET RAILING BEHIND 1'-6" TO 2'-6" WIDE BRUSHBLOCK

2'-3" HIGH PARAPET RAILING BEHIND 6" OR 9" WIDE BRUSHBLOCK

1'-10" HIGH PARAPET RAILING BEHIND 6" OR 9" WIDE BRUSHBLOCK

SECTIONS THRU PARAPET RAILING

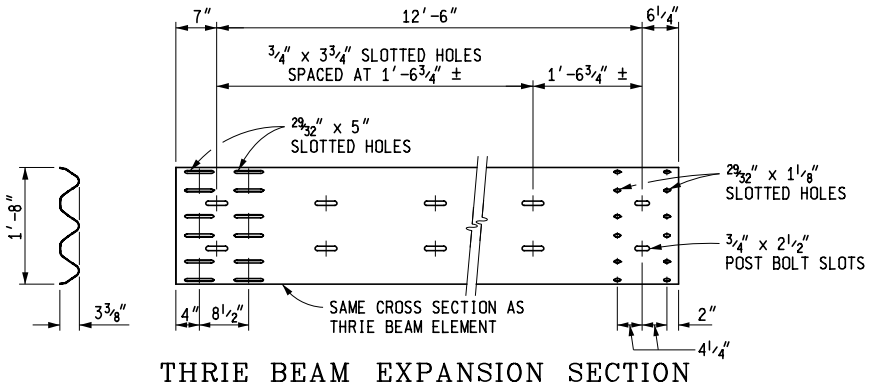


THRIE BEAM EXPANSION SECTION

NOTES:

THIS STANDARD IS INTENDED FOR USE IN UPGRADING OF EXISTING OPEN-PARAPET TYPE BRIDGE RAILINGS AND APPROACH GUARDRAIL.

BRIDGE RAILING, THRIE BEAM RETROFIT AND GUARDRAIL ANCHORAGES SHALL CONFORM TO THE CURRENT STANDARD PLAN R-60 SERIES, WHERE APPLICABLE, EXCEPT AS SHOWN ON THIS PLAN.

ALL WORK AND MATERIALS SHALL BE IN ACCORDANCE WTH SECTIONS 807 & 908 OF THE STANDARD SPECIFICATIONS.

REFLECTORIZED WASHERS SHALL BE SPACED AT 25'-0" INTERVALS AT BEAM ELEMENT SPLICES. THEY SHALL BE ATTACHED AT UPPER POST BOLT SLOTS WITH STANDARD SPLICE BOLTS.

FOR PRECAST THREE SIDED OR ARCH CULVERTS SPACE BLOCKOUTS FOR THRIE BEAM GUARDRAIL AT A DISTANCE OF 10'-7 3/4" OR LESS CENTER TO CENTER. PLACE FIRST AND LAST BLOCK ON HEADWALL AS DETAILED ON THIS STANDARD.

MICHIGAN DEPARTMENT OF TRANSPORTATION
BUREAU OF DEVELOPMENT STANDARD PLAN FOR

# BRIDGE RAILING, THRIE BEAM RETROFIT

(OPEN PARAPET TYPE BRIDGE RAILING)

| 4-7-2022 | 10-23-2019 | B-23-F | SHEET |
|---|---|---|---|
| F.H.W.A. APPROVAL | PLAN DATE | | 6 OF 6 |

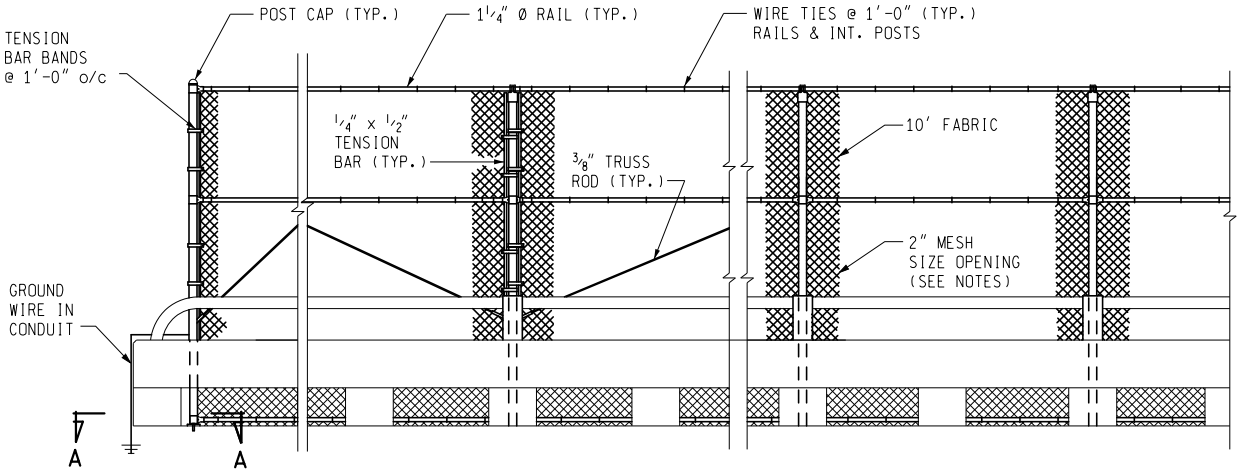


AT END PANEL

AT ANTI CLIMB SHIELD

TYPICAL PANEL

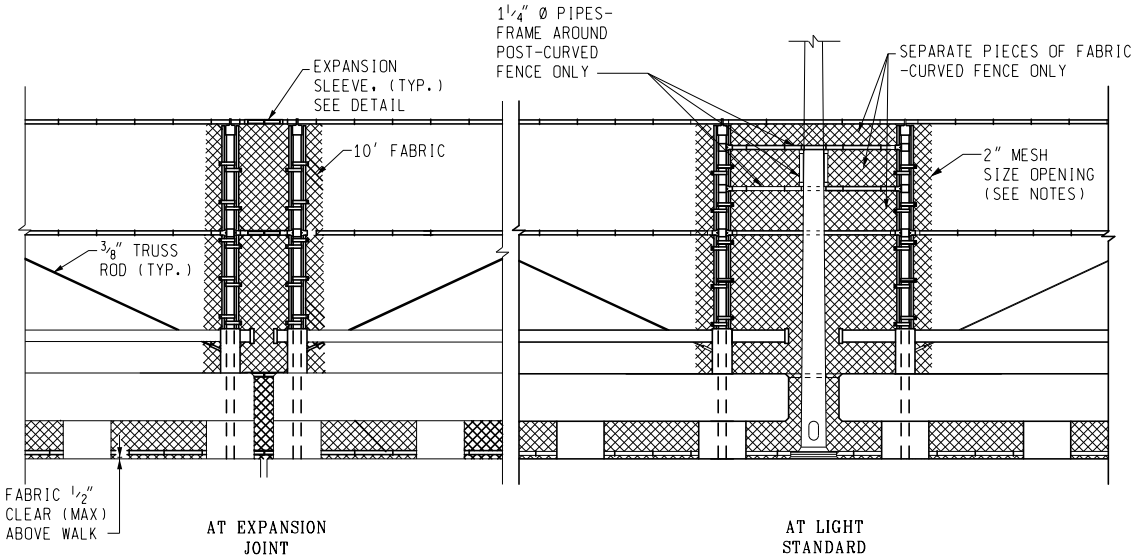


AT EXPANSION JOINT

AT LIGHT STANDARD

## TYPICAL ELEVATIONS

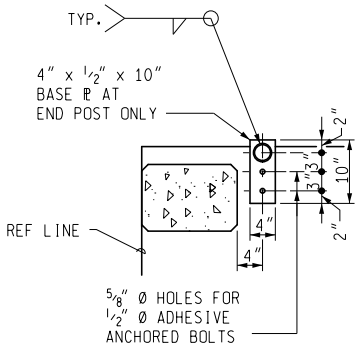


NOTE:
USE THIS DETAIL ONLY WHEN LOCATION OF THE WINGWALL PRECLUDES A STANDARD CONNECTION. OTHERWISE PLACE THE END FENCE POST IN THE CENTER OF THE END CONCRETE POST WITH STANDARD POST CONNECTION CLIPS.

## SECTION A-A

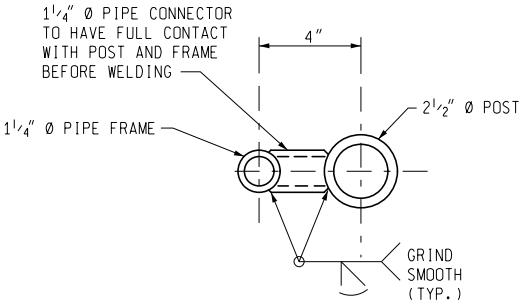


## PIPE CONNECTOR DETAIL

USE AT ANTI-CLIMB SHIELD ONLY

MDOT Michigan Department of Transportation

PREPARED BY DESIGN DIVISION

DRAWN BY: BLT

CHECKED BY: VZ

DEPARTMENT DIRECTOR
Kirk T. Steudle

APPROVED BY: Randy V. Parfitt
DIRECTOR, BUREAU OF FIELD SERVICES

APPROVED BY: Mark A. Van Port Fleet
DIRECTOR, BUREAU OF HIGHWAY DEVELOPMENT

MICHIGAN DEPARTMENT OF TRANSPORTATION
BUREAU OF HIGHWAY DEVELOPMENT STANDARD PLAN FOR

# FENCING FOR PEDESTRIAN STRUCTURE

## EXISTING OPEN PARAPET

| 1-25-2013 | 4-15-2009 | B-32-D | SHEET |
|---|---|---|---|
| F.H.W.A. APPROVAL | PLAN DATE | | 1 OF 2 |

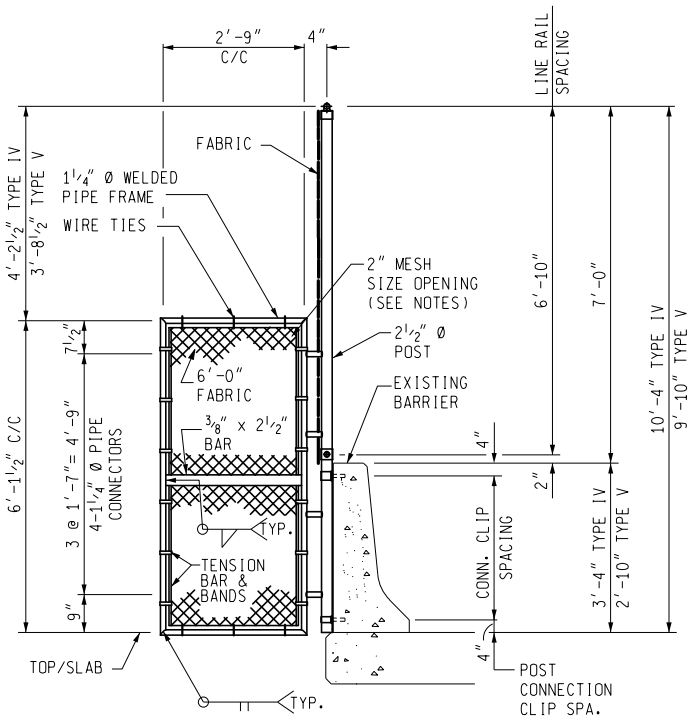


## ANTI-CLIMB SHIELD/POST DETAIL

THE ANTI-CLIMB SHIELD SHALL BE LOCATED AT THE SECOND POST FROM THE END OR AS SHOWN ON THE PLANS OR AS DIRECTED BY THE ENGINEER.

NOTES:

ALL FENCE POSTS SHALL BE 2½" NOMINAL, (2.875" O.D.) PIPE AND ANTI-CLIMB SHIELD PIPE FRAMES SHALL BE 1¼" NOMINAL, (1.66" O.D.) PIPE, IN CONFORMANCE WITH ASTM F669, CLASS 1C.

HORIZONTAL RAILS SHALL BE 1¼" NOMINAL (1.66" O.D.) PIPE IN CONFORMANCE WITH ASTM F669, CLASS 1C OR ASTM F1083.

ALL FENCE COMPONENTS, UNLESS OTHERWISE INDICATED, SHALL BE GALVANIZED IN ACCORDANCE WITH MDOT'S CURRENT STANDARD SPECIFICATIONS FOR CONSTRUCTION.

ALL POSTS, ANTI-CLIMB SHIELDS OR OTHER COMPONENTS TO BE FABRICATED SHALL BE FURNISHED "BLACK", FABRICATED (WELDED) AND THEN GALVANIZED.

DAMAGED GALVANIZED SURFACES (NEW AND EXISTING) SHALL BE REPAIRED IN CONFORMANCE WITH MDOT'S CURRENT STANDARD SPECIFICATIONS FOR CONSTRUCTION.

FENCE FABRIC SHALL BE #9 GAGE MESH AND BE GALVANIZED OR ALUMINUM COATED IN CONFORMANCE WITH MDOT'S CURRENT STANDARD SPECIFICATIONS FOR CONSTRUCTION. MESH SIZE OPENING SHALL BE 2" UNLESS 1" MESH SIZE OPENING IS APPROVED BY THE TRAFFIC AND SAFETY DIVISION AND NOTED ON DESIGN PLANS. ALL DETAILS ON STANDARD PLAN SHALL APPLY REGARDLESS OF MESH SIZE OPENINGS.

GALVANIZED ⅜" Ø TRUSS RODS SHALL EXTEND DIAGONALLY FROM THE TOP CONNECTION CLIP AT EACH TENSION BAR TO THE ADJACENT POST, EXCEPT ACROSS EXPANSION JOINTS AND AT LIGHT STANDARDS WITH A CURVED FENCE DETAIL, WHEN THERE ARE TWO OR MORE CONTINUOUS PANELS OF FABRIC.

ALL BOLT FASTENERS SECURED IN CONCRETE SHALL BE ½" DIAMETER "ADHESIVE ANCHORED BOLTS" WITH 4½" EMBEDMENT. THE STRUCTURAL ADHESIVE SHALL BE CHOSEN FROM THE QUALIFIED PRODUCTS LIST IN THE CURRENT MDOT MATERIALS SOURCE GUIDE.

THE HOLE SIZE FOR ADHESIVE ANCHORED BOLTS SHALL BE PROPOSED BY THE CONTRACTOR IN ACCORDANCE WITH THE ADHESIVE BONDING AGENT MANUFACTURER'S RECOMMENDATION AND FIELD TESTED IN ACCORDANCE WITH MDOT'S CURRENT STANDARD SPECIFICATIONS FOR CONSTRUCTION.

THE CONTRACTOR IS TO PROVIDE EITHER A PLATFORM OR OTHER MEANS OF ACCESS FOR THE INSPECTION AND/OR TESTING OF THE ADHESIVE ANCHORED BOLTS. ALL LABOR, MATERIALS, AND EQUIPMENT NEEDED FOR THE ERECTION, MAINTENANCE, AND REMOVAL OF THE PLATFORM, OR OTHER MEANS OF ACCESS, SHALL BE INCLUDED IN THE PAY ITEM "FENCE, STRUCTURE".

THE CONTRACTOR SHALL FOLLOW THE MANUFACTURER'S INSTALLATION PROCEDURES WHEN INSTALLING THE ADHESIVE ANCHORED BOLTS.

ALL POSTS SHALL BE INSTALLED PLUMB AND MAY BE SHIMMED WITH NON-METALLIC SHIMS, APPROVED BY THE ENGINEER. COSTS FOR SHIMMING SHALL BE INCLUDED IN THE PAY ITEM "FENCE, STRUCTURE".

THE GROUND WIRE SHALL BE PLACED IN A NON-METALLIC CONDUIT, FROM THE END POST CONNECTION TO THE GROUND ROD CONNECTION. THE CONDUIT SHALL BE SECURED TO THE STRUCTURE USING EITHER EXPANSION BOLTS OR ADHESIVE ANCHORED BOLTS WITH GALVANIZED METAL STRIPS, AS APPROVED BY THE ENGINEER.

IN THE EVENT THAT INSTALLATION OF A GROUND ROD IS IMPRACTICAL, THE GROUND WIRE SHALL BE CONNECTED TO THE NEAREST LIGHT STANDARD, USING A MECHANICAL CLIP, ONLY AFTER OBTAINING PERMISSION FROM THE LOCAL PUBLIC LIGHTING AUTHORITY.

EXPANSION JOINT SLEEVES, FOR HORIZONTAL RAILS, SHALL BE THE MANUFACTURER'S STANDARD OVERSIZED SLEEVES, CRIMPED IN THE MIDDLE.

ALL LABOR, MATERIAL AND EQUIPMENT REQUIRED TO INSTALL PEDESTRIAN FENCING SHALL BE INCLUDED IN PAY ITEM "FENCE, STRUCTURE".

MICHIGAN DEPARTMENT OF TRANSPORTATION

BUREAU OF HIGHWAY DEVELOPMENT STANDARD PLAN FOR

# FENCING FOR PEDESTRIAN STRUCTURE

## EXISTING TYPE 4 & 5 BARRIER

| 1-25-2013 | 4-15-2009 | B-38-D | SHEET |
|---|---|---|---|
| F.H.W.A. APPROVAL | PLAN DATE | | 2 OF 2 |

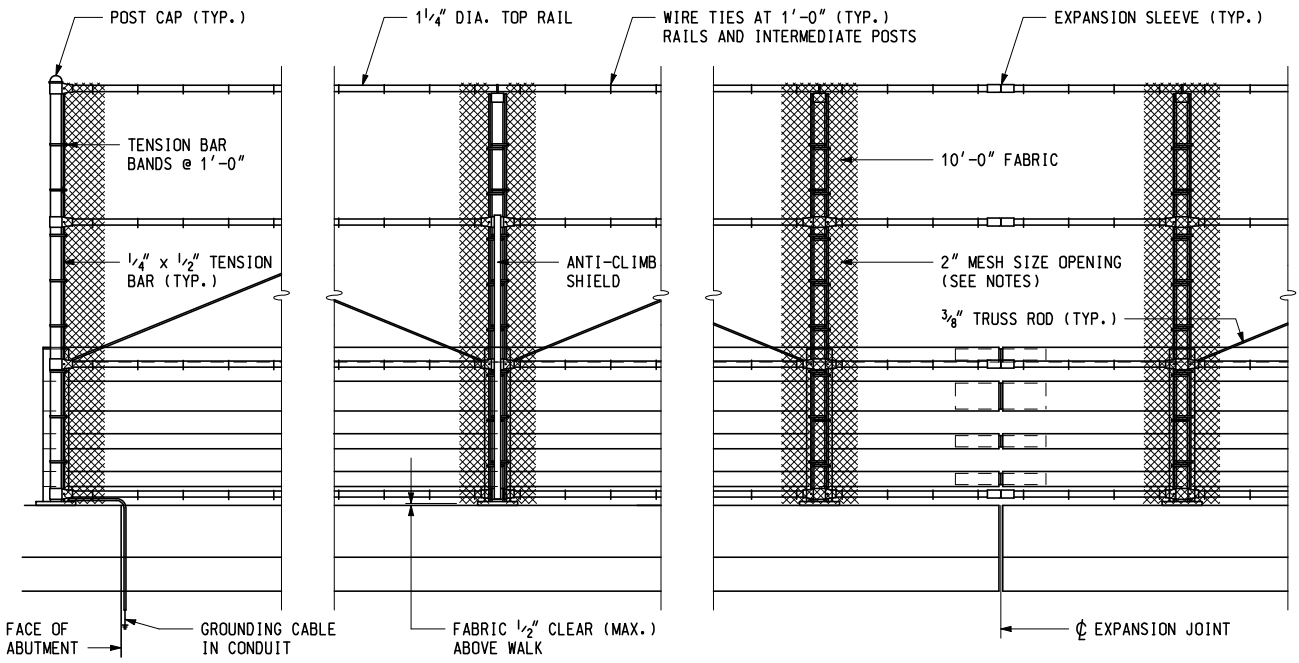


AT END PANEL AT ANTI-CLIMB SHIELD AT EXPANSION JOINT

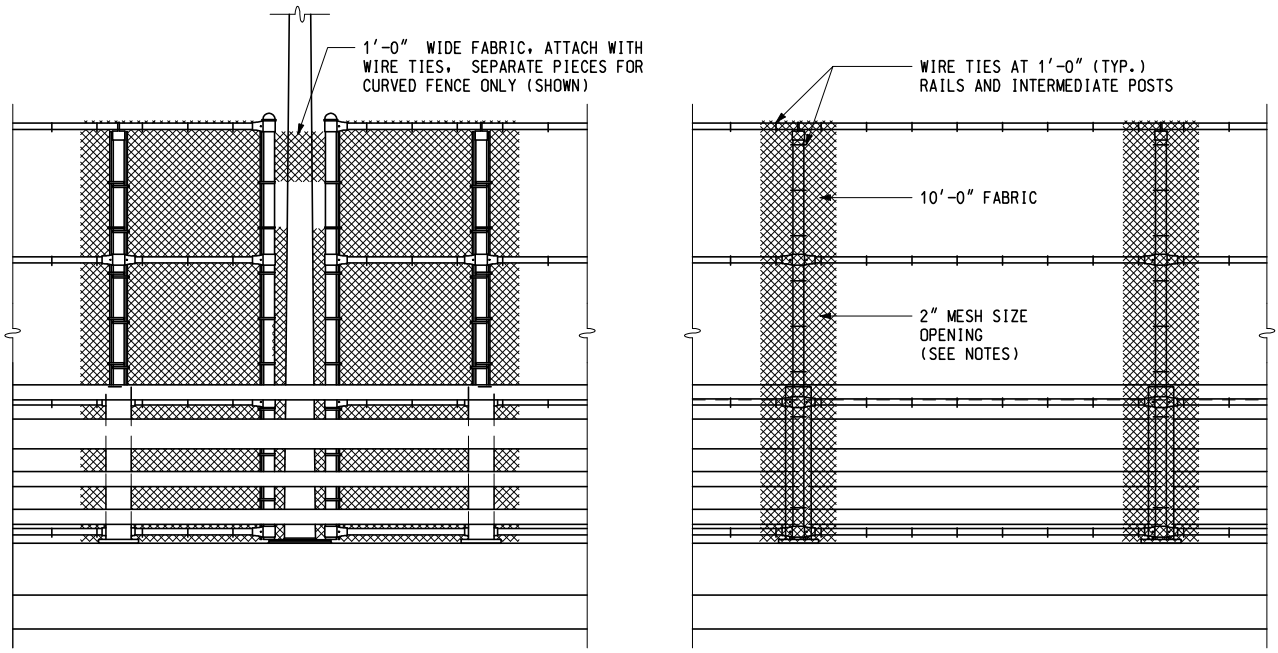


AT LIGHT STANDARD AT TYPICAL PANEL

## TYPICAL ELEVATIONS

PEDESTRIAN RAILING SHOWN BICYCLE RAILING SIMILAR

MDOT Michigan Department of Transportation

PREPARED BY DESIGN SUPPORT AREA

DRAWN BY: B.L.T.

CHECKED BY: V.Z.

ENGINEER OF CONSTRUCTION & TECHNOLOGY

ENGINEER OF MAINTENANCE

ENGINEER OF TRAFFIC AND SAFETY

ENGINEER - STRUCTURES SECTION

ENGINEER OF DESIGN SUPPORT AREA

DEPARTMENT DIRECTOR
Gloria J. Jeff

ENGINEER OF DEVELOPMENT

MICHIGAN DEPARTMENT OF TRANSPORTATION
BUREAU OF HIGHWAY DEVELOPMENT STANDARD PLAN FOR

# FENCING FOR BRIDGE RAILING, 4 TUBE

| 9-29-2003 | 2-13-2003 | B-40-A | SHEET |
|---|---|---|---|
| F.H.W.A. APPROVAL | PLAN DATE | | 1 OF 3 |

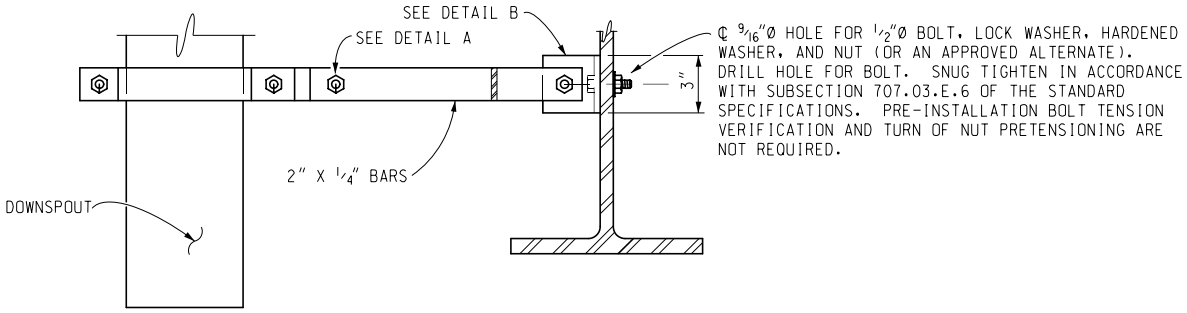


## SECTION B-B

(ANCHORED TO STEEL BEAM WEB)

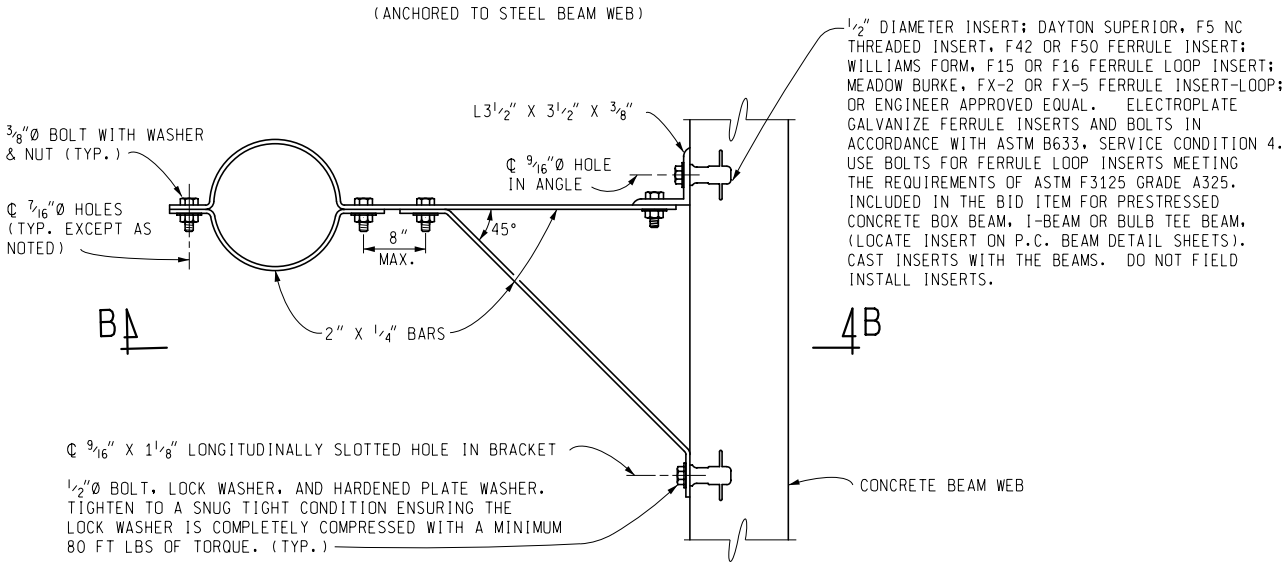


## PLAN VIEW OF BRACKET

(ANCHORED TO CONCRETE BEAM WEB)

# BRACKET DETAILS

(FOR CONCRETE OR STEEL BEAMS)

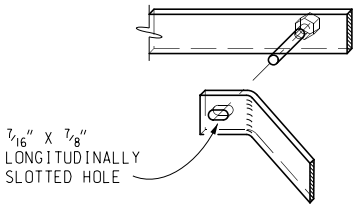


## DETAIL A

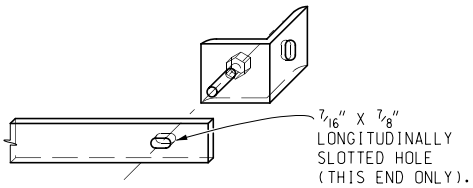


## DETAIL B

MICHIGAN DEPARTMENT OF TRANSPORTATION

BUREAU OF DEVELOPMENT STANDARD PLAN FOR

# DRAIN CASTING ASSEMBLY DETAILS

| 4-7-2022 | 9-9-2021 | B-101-G | SHEET |
|---|---|---|---|
| F.H.W.A. APPROVAL | PLAN DATE | | 2 OF 2 |