BAR DIMENSIONS						
SPAN	GRADE	NO. REQD.	BAR	A	B	E
			EA1	Y-3"	-	-
			EA2*5	-	-	-
			EA3	Y-3"	-	-
			ED1*3	8'-10¾"	2½"	-
			ED2*4	4"	2'-9½"	-
			EX1*3	-	-	-
			EL1	6'-2¾"	3¾"	6" HOOK
			EL2	6'-2¾"	3¾"	6" HOOK
			EL3	6'-2¾"	3¾"	6"

*"E" INDICATES EPOXY COATED BAR

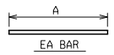

EA BAR

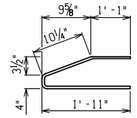

EX BAR

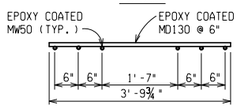

EWW1 MESH

WELDED WIRE FABRIC USED IN THE TOP FLANGE OF ALL BEAMS. FABRIC PIECE AT END OF BEAM SHALL BE A MINIMUM OF 13'-0" IN LENGTH. (LAPPING NOT REQUIRED)
EPOXY COATED CLASS A, TYPE 1 MW50 AND MD130, SHALL BE IN ACCORDANCE WITH ASTM A 884 AND A 1064 RESPECTIVELY.

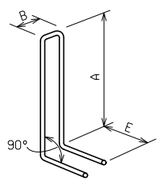

EL3 BAR

EA06 BAR
FOR SPLITTING RESISTANCE AT END OF BEAM
(SEE SHEET 2)

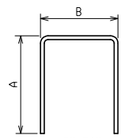

ED BAR

BEAM DATA				
MARK				
NO. REQ.				
a				
b'				
c				
E				
F				
g				
G				
h				
J				
J'				
K				
L*				
L'*				
M*				
N*				
R				
S				
T				
U				
V				
X				
Y				
Z				
APPROX. MASS				

*FORMING DIMENSION. IF L OR L' IS COMPUTED TO BE BETWEEN -½" & +½" USE L=0 OR L'=0.
*MEASURED ALONG BEAM ℄.

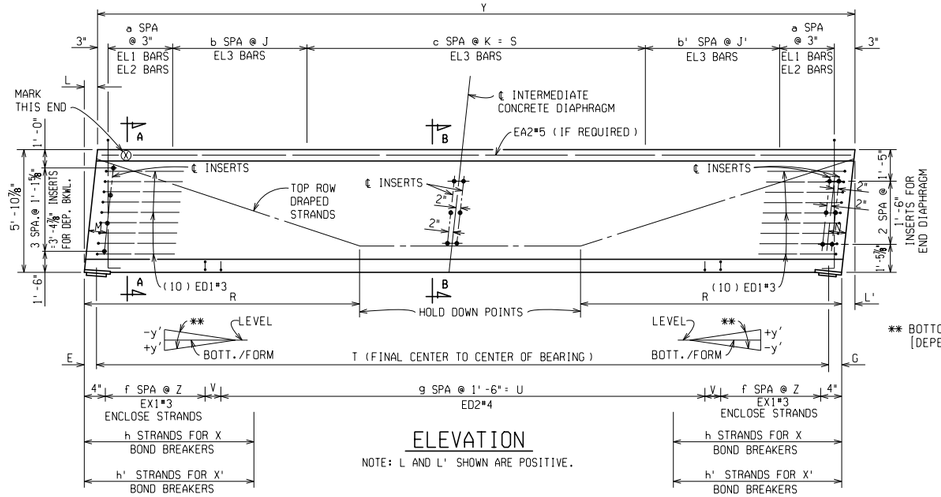

ELEVATION

NOTE: L AND L' SHOWN ARE POSITIVE.

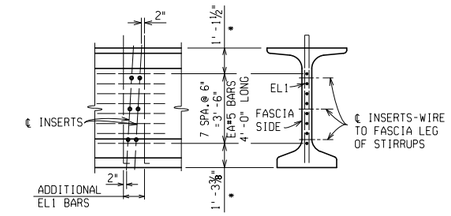

FASCIA BEAM INTERMEDIATE DIAPHRAGM INSERT DETAILS

[* MODIFY TO 10" & 1'-8" IF MORE THAN 58 STRANDS ARE USED IN THE BEAM.]

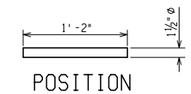

POSITION DOWEL DETAIL

MISCELLANEOUS QUANTITIES		
_____ Sin	Bearing, Elastomeric, __ inch	
_____ Ft	Prest Conc 1800 Beam, Furn	
_____ Ft	Prest Conc 1800 Beam, Erect	

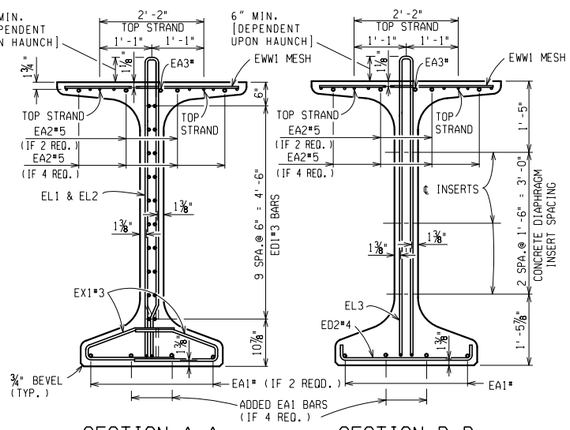

SECTION A-A

PRESTRESSED TOP STRAND TO 4-5 KIPS EACH.

SECTION B-B

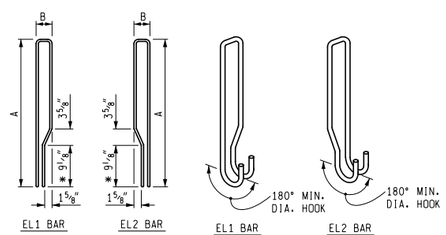

EL1 & EL2 END VIEW

EL1 BAR EL2 BAR

EL1 BAR EL2 BAR

[ALTERNATE EL1 AND EL2 BARS AT ENDS OF BEAM WITH 3" SPACING OR EL BAR SPACING ≤ 6".]

[* THE VERTICAL LOCATION OF THE TAPER IN THE LEG OF THE EL1 AND EL2 BAR MAY NEED TO BE ADJUSTED TO AVOID CONFLICTS WITH STRANDS.]

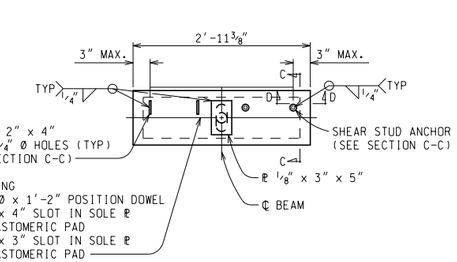

PLAN

BEARING DETAILS

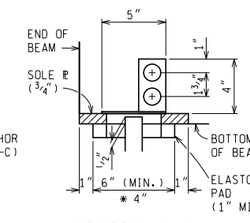

SECTION C-C

PLATE OPTION

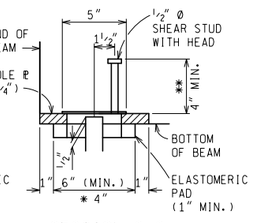

SECTION C-C

SHEAR STUD OPTION

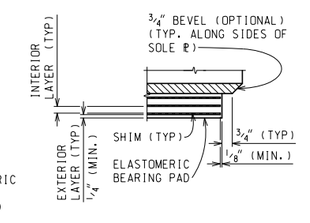

SECTION D-D

* 4" MINIMUM PAD LENGTH WITH 3" SLOT MAY BE USED WHEN BEAM ROTATION AND PAD PRESSURE REQUIREMENTS DICTATE.

** EXTEND SHEAR STUDS ABOVE HIGHEST ROW WITH STRANDS WITHOUT INTERFERENCE TO REINFORCEMENT

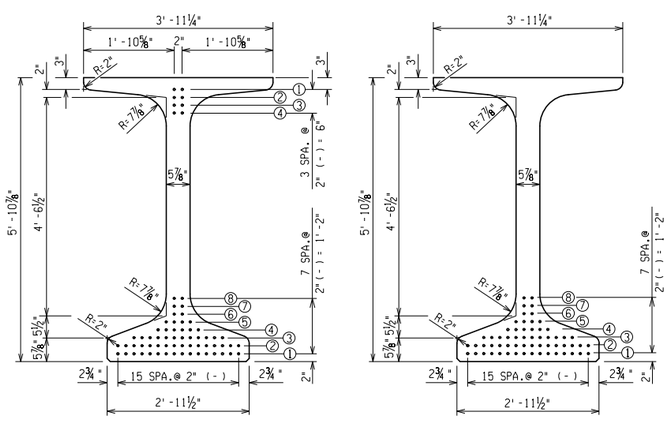

SECTION A-A

SHOWING STRAND LOCATIONS
● STRAND LOCATION
+ DEBONDED STRAND

SECTION B-B

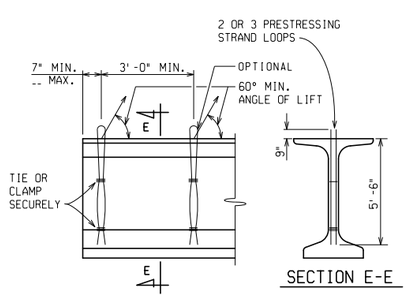

LIFTING DEVICE

SECTION E-E

STRAND LOCATION TABLE																												
SPAN	MIDSPAN (SECTION B-B)								END FACE (SECTION A-A)												TOTAL NUMBER	REQUIRED CONCRETE COMPRESSIVE STRENGTH (PSI)	
	BOTTOM								BOTTOM								TOP						
	①	②	③	④	⑤	⑥	⑦	⑧	①	②	③	④	⑤	⑥	⑦	⑧	①	②	③	④		28 DAY	AT RELEASE

PRESTRESSING STRAND LIFTING DEVICES		
BEAM WEIGHT (TONS)	STRAND SIZE	NO. OF STRANDS
34	⅜"	2
43	7/16"	2
53	½"	2
53	⅜"	3
62	7/16"	3
70	½"	3

SOLE ℞ TILT TABLE		
BEAM LINE	SPAN 1	
	ABUT A	ABUT B
	y	y'

ELASTOMERIC PAD AND SHIM DIMENSIONS		
	SPAN 1	
	ABUT A	ABUT B
PAD THICKNESS		
L PARALLEL TO BEAM		
W PERPENDIC. TO BEAM		
GG		
LAYERS	2 @	2 @
SHIMS	3 @	3 @

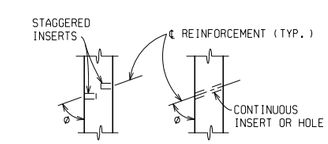

CONCRETE INSERT DETAILS

STAGGER CONCRETE INSERTS AT ENDS OF BEAMS.

USE CONTINUOUS OR STAGGERED INSERTS AT MIDSPAN. [USE FOR CONCRETE DIAPHRAGMS]

USE STAGGERED INSERTS AT MIDSPAN AND INDEPENDENT BACKWALLS. CAST PERPENDICULAR TO BEAM WEBS. [USE WITH STEEL DIAPHRAGMS WHEN REQUIRED Ø ANGLE IS < 80°]

USE CONTINUOUS HOLE FORMED WITH 1½" I.D. PLASTIC PIPE. [USE WITH STEEL DIAPHRAGMS WHEN REQUIRED Ø ANGLE IS ≥ 80° AND AT DEPENDENT BACKWALLS.]

BEND THREADED REINFORCEMENT FOR STAGGERED INSERTS TO THE REQUIRED Ø ANGLE PRIOR TO INSTALLATION. [USE FOR CONCRETE DIAPHRAGMS AND ABUTMENTS WITH DEPENDENT BACKWALLS]

INSTALLATION OF BENT REINFORCEMENT MAY BE REQUIRED BEFORE BEAM IS ERECTED PRIOR TO INSTALLATION. [USE FOR CONCRETE DIAPHRAGMS AND ABUTMENTS WITH DEPENDENT BACKWALLS]

OMIT INSERTS ON OUTSIDE OF FASCIA BEAMS EXCEPT AT ABUTMENTS WITH DEPENDENT BACKWALLS.

USE CONCRETE INSERTS AT MIDSPAN, PIERS AND INDEPENDENT BACKWALL BRIDGES ON THE INTERIOR OF FASCIA BEAMS. OTHER BEAMS MAY USE INSERTS OR CONTINUOUS HOLES.

PLAN REVISIONS							
NO.	DATE	AUTH	DESCRIPTION	NO.	DATE	AUTH	DESCRIPTION

MDOT Michigan Department of Transportation

NO SCALE

DRAWN BY:		DATE:	CS:
CHK'D BY:	CORR BY:	DESIGN UNIT:	JN:
FILE:		TSC:	

PRESTRESSED CONCRETE
1800 BEAM DETAILS
PC-4G (11-28-2022)

DRAWING	SHEET

NOTE TO USER: NOTES IN "[.....]" ARE GUIDANCE TO THE USER AND GENERALLY ARE REMOVED FROM THE FINAL PLANS BASED ON DESIGN SPECIFIC BEAM DETAILS.

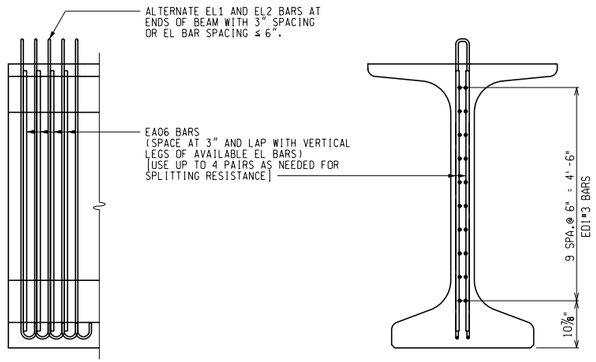

END OF BEAM
ADDITIONAL REINFORCEMENT

[(USE IF REQUIRED FOR SPLITTING RESISTANCE)]

NOTES:

USE 0.6" NOMINAL DIAMETER PRESTRESSING STRAND MEETING THE REQUIREMENTS OF AASHTO M203 (ASTM A416), GRADE 270, LOW RELAXATION STRAND.

TENSION 0.6" DIA. PRESTRESSING STRANDS TO AN INITIAL PRESTRESS OF 44,000 LBS.

PROVIDE CONCRETE INSERTS FOR DRAIN CASTING ASSEMBLY BRACKETS ACCORDING TO STANDARD PLAN B-101-SERIES. CAST INSERTS WITH THE BEAMS. DO NOT FIELD INSTALL INSERTS.

TOTAL ESTIMATED CHANGE OF LENGTH OF BOTTOM FLANGE AT TRANSFER OF PRESTRESS FORCE IS ___".

THE ESTIMATED BEAM CAMBER AT RELEASE IS ___". THIS CAMBER IS DUE TO PRESTRESS AND DEAD LOAD OF THE BEAM ONLY AND IS MEASURED IN THE ERECTED POSITION.

DURING HANDLING AND TRANSPORTATION, SUPPORT BEAMS ___ FEET FROM THE END. IF TWO ADDITIONAL STRANDS ARE DRAPED, SUPPORT BEAMS ___ FEET FROM THE END.

BEAMS IN SPAN(S) ___ MAY BE LATERALLY UNSTABLE. TAKE PRECAUTIONS TO ENSURE THAT BEAMS ARE NOT DAMAGED DURING HANDLING AND TRANSPORTATION. [USE WHEN FACTOR OF SAFETY FOR LATERAL BUCKLING IS 1.2 OR LESS.]

THREADING OF REINFORCEMENT AND INSTALLATION INTO CONCRETE INSERTS IS INCLUDED IN THE BID ITEM ("PREST CONC 1800 BEAM, FURN").

REMOVE LIFTING DEVICES AFTER BEAMS ARE ERECTED. REMOVAL IS INCLUDED IN THE BID ITEM ("PREST CONC 1800 BEAM, ERECT").

FILL HOLES CAST OR FORMED IN THE BEAM WITH NON-SHRINKING GROUT. INCLUDED IN THE BID ITEM ("PREST CONC 1800 BEAM, ERECT").

AT THE LOCATIONS SHOWN ON THE PLANS, APPLY SILANE TO THE BEAM ENDS FOR A DISTANCE OF ___ FEET, STARTING FROM THE BEAM END AT THE JOINT, COATING BOTH SIDES, BOTTOM AND ENDS OF BEAMS (DO NOT COAT OUTSIDE AND BOTTOM OF FASCIA BEAMS.). [USE ON MICHIGAN 1800 BEAM PROJECTS WITH EXPANSION JOINTS. SHOW THE LOCATIONS TO BE COATED ON THE ERECTION DIAGRAM. IF CONCRETE SURFACE COATING IS BEING APPLIED TO FASCIA BEAMS, DO NOT APPLY SILANE IN AREAS THAT WILL RECEIVE CONCRETE SURFACE COATING. INCLUDE SPECIAL PROVISION FOR SILANE TREATMENT FOR BRIDGE CONCRETE.]

APPLY CONCRETE SURFACE COATING TO THE ENTIRE OUTSIDE AND BOTTOM OF THE FASCIA BEAMS. (USE CONCRETE SURFACE COATING AMS-STD-595 COLOR NUMBER [INSERT NUMBER], [INSERT COLOR].) [USE ON MICHIGAN 1800 BEAM BRIDGES WHERE COATING FASCIA BEAMS WILL NOT SIGNIFICANTLY AFFECT THE MAINTAINING TRAFFIC AND WHEN REQUESTED BY THE REGION OR ROADSIDE DEVELOPMENT SECTION.]

PROVIDE GRADE 60 (KSI) BEAM STEEL REINFORCEMENT, INCLUDING STIRRUPS.

FIELD DRILLING IS ALLOWED FOR SIGN SUPPORT ANCHORS ONLY. LOCATION OF ANCHORS IS AS DETAILED ON TRAFFIC & SAFETY SIGN SUPPORT SPECIAL DETAILS. REPAIR ANY DAMAGE TO THE BEAMS AT THE CONTRACTOR'S EXPENSE AS APPROVED BY THE ENGINEER.

GALVANIZE OR EPOXY COAT ITEMS CAST INTO THE BEAMS TO FACILITATE BRIDGE CONSTRUCTION (FORMING, FINISHING, ETC.).

USE ($^3/_4$") (1") DIAMETER CONCRETE INSERTS; DAYTON SUPERIOR, F63 FLARED THIN SLAB COIL INSERT; WILLIAMS FORM, C18 COIL WINGNUT INSERT; MEADOW BURKE, CX-28 COIL WINGNUT INSERT; OR ENGINEER APPROVED EQUAL. ELECTROPLATE GALVANIZE COIL INSERTS IN ACCORDANCE WITH ASTM B633, SERVICE CONDITION 4. CAST INSERTS WITH THE BEAMS. DO NOT FIELD INSTALL INSERTS. [USE FOR MICHIGAN (MI) 1800 BEAMS AT BACKWALLS OR CONCRETE DIAPHRAGMS.]

USE $^7/_8$" BOLT DIAMETER, $4^1/_2$" ($4^5/_8$") LONG CONCRETE INSERTS; DAYTON SUPERIOR, F42 OR F64 LOOP FERRULE INSERT; WILLIAMS FORM, F15 OR F16 FERRULE LOOP INSERT; MEADOW BURKE, FX-2 OR FX-5 FERRULE INSERT - LOOP; OR ENGINEER APPROVED EQUAL. ELECTROPLATE GALVANIZE FERRULE INSERTS AND BOLTS IN ACCORDANCE WITH ASTM B633, SERVICE CONDITION 4. CAST INSERTS WITH THE BEAMS. DO NOT FIELD INSTALL INSERTS. [USE FOR MICHIGAN 1800 BEAMS WITH STEEL DIAPHRAGMS.]

PLAN REVISIONS							
NO.	DATE	AUTH	DESCRIPTION	NO.	DATE	AUTH	DESCRIPTION

MDOT Michigan Department of Transportation

NO SCALE

DRAWN BY:		DATE:	CS:
CHK'D BY:	CORR BY:	DESIGN UNIT:	JN:
FILE:		TSC:	

PRESTRESSED CONCRETE
1800 BEAM DETAILS
PC-4G (11-28-2022)

DRAWING	SHEET