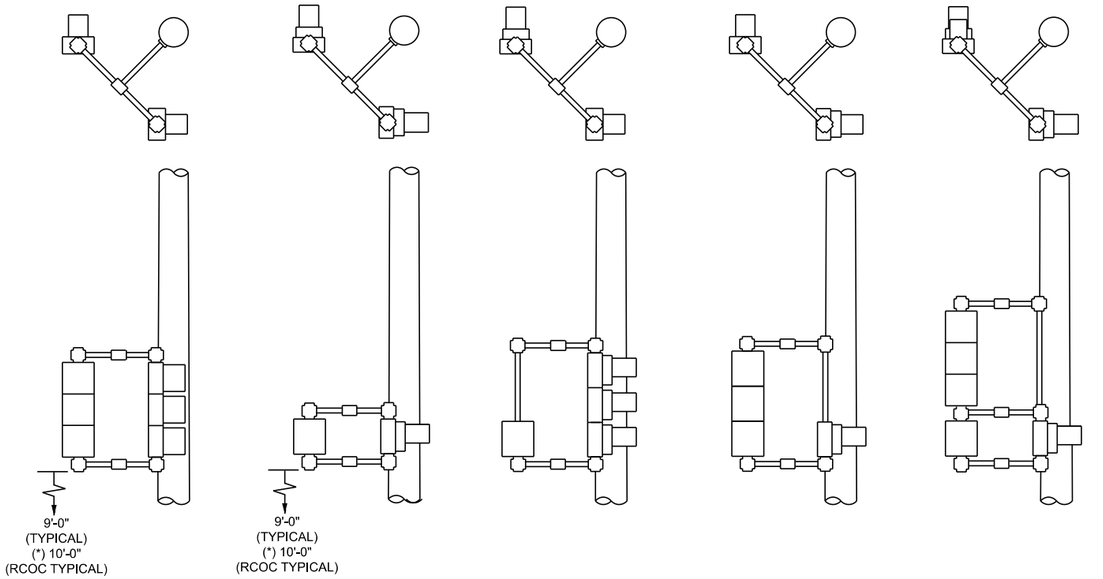

A-3 N.T.S. B-3 N.T.S. C-3 N.T.S. D-3 N.T.S. E-3 N.T.S.

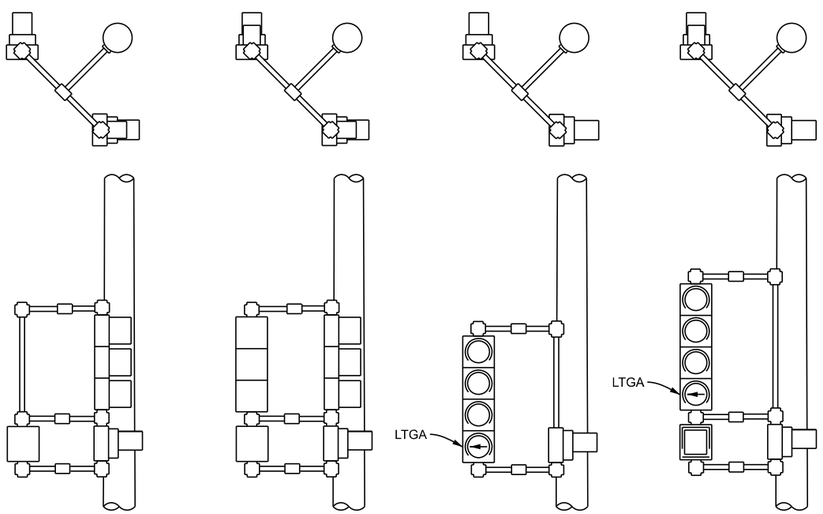

F-3 N.T.S. G-3 N.T.S. H-3 N.T.S. I-3 N.T.S.

LEFT TURN GREEN ARROW (LTGA)

(*) REFER TO NOTE 5 ON SHEET 2 OF 2

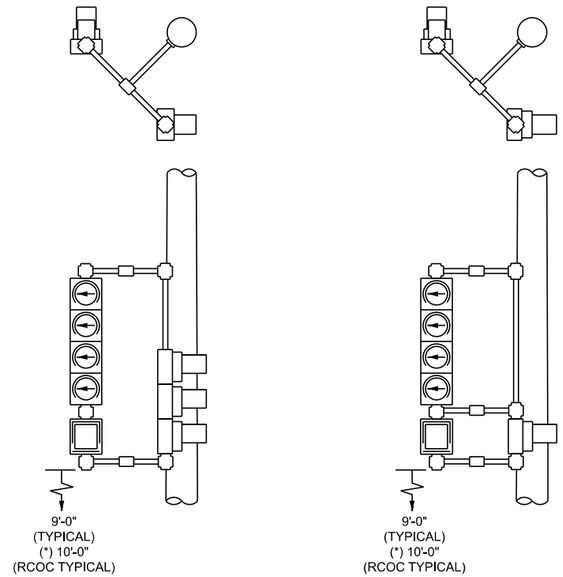

J-3 N.T.S. (FYA) K-3 N.T.S. (FYA)

FLASHING YELLOW ARROW (FYA)

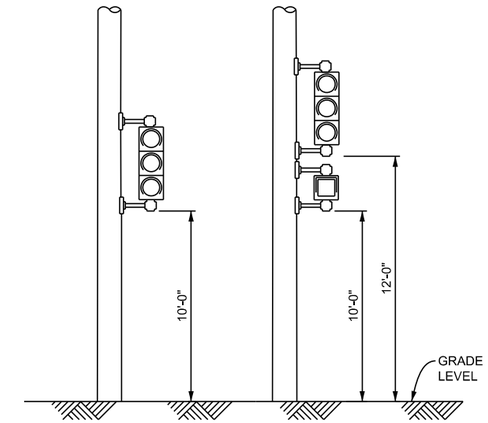

X DETAIL - RCOC MOUNTING DETAIL
N.T.S. (*) SEE NOTE (*) SEE NOTE

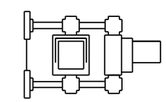

LED PED

NOTE:
WALKING PERSON AND
HAND SYMBOL ARE FILLED.

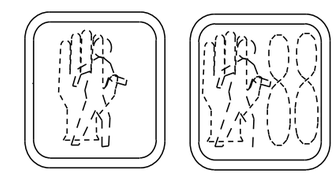

LED PED
(FILLED)

COUNTDOWN
LED PED
(FILLED SYMBOLS)

NOTES:

1) THE RELATIVE POSITION OF 2-WAY T.S. & PEDESTRIAN BRACKET ARM SIGNALS WITHIN THE BRACKET ASSEMBLY SHALL BE REVERSED (I.E. THE SIGNAL NEAREST THE POLE GOES TO THE OUTSIDE OF THE BRACKET ASSEMBLY & THE OUTSIDE SIGNAL GOES INBOARD OR NEAREST TO POLE) ACCORDING TO THE PLAN VIEW TO PROVIDE CLEAR VEHICULAR AND PEDESTRIAN VIEWING.

2) PIPE ASSEMBLY SHALL BE OF SUCH LENGTH AND HEIGHT AS TO ACCOMMODATE TRAFFIC SIGNALS AND PEDESTRIAN SIGNALS FOR PROPER MAINTENANCE AND CLEAR VEHICULAR AND PEDESTRIAN VIEWING.

3) PIPE ASSEMBLY SHALL BE OF SUCH LENGTH AND HEIGHT AS TO ACCOMMODATE AN ILLUMINATED (12"X27") CASE SIGN FOR PROPER MAINTENANCE AND CLEAR VEHICULAR VIEWING.

4) BRACKET LENGTHS ARE 16 INCHES FOR LED PEDESTRIAN SIGNALS AND LED PEDESTRIAN COUNTDOWN SIGNALS.

6) TOLERANCE WITHIN +/- ⅛" FOR BRACKETING.

(*) FOR PROJECTS MAINTAINED BY THE ROAD COMMISSION FOR OAKLAND COUNTY (RCOC), USE THE BOTTOM HEIGHTS AND BRACKET ASSEMBLIES AS SHOWN FOR THE RCOC MOUNTING DETAIL.

APPROVED BY: _____
DIRECTOR, BUREAU OF FIELD SERVICES

APPROVED BY: _____
DIRECTOR, BUREAU OF DEVELOPMENT

MDOT
Michigan Department of Transportation

DEPARTMENT DIRECTOR
BRADLEY C. WIEFERICH, PE

STANDARD PLAN FOR
BACK BRACKET
SIGNAL DISPLAYS

(SPECIAL DETAIL)	02/16/17	SIG-342-A	SHEET
FHWA APPROVAL	PLAN DATE		1 OF 2

MDOT
Michigan Department of Transportation

DEPARTMENT DIRECTOR
BRADLEY C. WIEFERICH, PE

STANDARD PLAN FOR
BACK BRACKET
SIGNAL DISPLAYS

(SPECIAL DETAIL)	02/16/17	SIG-342-A	SHEET
FHWA APPROVAL	PLAN DATE		2 OF 2

SECT