Section 921. PERMANENT TRAFFIC SIGNAL MATERIALS

921.01. Sampling and Testing.

A. **General.** The Department may select permanent traffic signal materials covered by this section at random from shipments and test in accordance with Department methods. If requested by the Department, complete one installation for preliminary testing. If the preliminary sample does not meet the requirements of this section, the Department will notify the Contractor, in writing, of deficiencies so the Contractor may make the necessary changes or corrections in materials or installation methods. The Department may re-test traffic signal materials after the Contractor makes the necessary changes or corrections.

B. **Loop Detectors.** The Department will randomly select one or more loop detectors from the shipment and perform testing as specified in subsection 921.01.A. If the one tested loop detector meets the requirements of subsection 921.01.A, the Department will give the Contractor written notification to provide the remainder of the order, which will be subject to testing.

If the preliminary sample does not meet to the requirements of subsection 921.01.A, the Department will notify the Contractor, in writing, of deficiencies so the Contractor may make changes or corrections in materials or installation methods. All loop detectors will then be subject to testing. If the Contractor does not, or cannot make corrections, the Department will require the Contractor to provide materials from other sources in accordance with section 105.

C. **Warranty.** Provide materials with a manufacturer's guarantee or warranty, transferable to the Department, that the material is free of defects in materials and workmanship for a specified period from the date of shipment. Provide the Engineer with the manufacturer's guarantee or warranty documents and a copy of the invoice showing date of shipment.

921.02. Span Wire. Use extra high-strength Grade, 7-wire, Class A, zinc-coated steel, meeting the requirements of ASTM A 475. Provide wire with a nominal diameter of ¼ inch for supporting traffic signal cables, including self supporting figure-8 type cable. Provide wire with a nominal diameter of $^{5}/_{16}$ inch for supporting a traffic signal, case sign, and cable.

921.03. Vehicular Traffic Signals and Mounting Assemblies. Unless otherwise required, provide traffic signals meeting the requirements of the Institute of Traffic Engineers (ITE) Standard, the *Standard for*

Adjustable Face Vehicle Traffic Control Signal Heads, Vehicle Traffic Control Signal Heads (VTCSH), Light Emitting Diode (LED) Circular Signal Supplement, and the LED Vehicle Arrow Traffic Signal Supplement.

Provide adjustable face-type traffic signals with 8 inch or 12 inch diameter lenses. Provide signal sections of the same make and type to ensure they are interchangeable. Signal faces include LED traffic signal modules for ball lenses, arrow lenses, or both, socket assembly gaskets, reflector and door assembly, housing, visors, optical units, wiring, and mounting assembly. Provide LED vehicular traffic signals compatible in new installations, or as a retrofit unit capable of replacing the optical unit of existing vehicular traffic signal sections meeting the ITE requirements.

A. **Housing.** Provide polycarbonate plastic housing. Provide each signal body with a 2 inch diameter hole in the top and bottom to receive 1½ inch diameter supporting pipe. Provide AISI Series 300 stainless steel fasteners if at least partially exposed on the exterior of the assembled housing. Provide AISI Series 300 stainless steel screws, bolts, nuts, and hinge pins for the interior of the housing. Provide other hardware used on the interior in AISI Series 300 stainless steel, brass, or aluminum. Do not use plastic fasteners to secure the door.

B. **Visor.** Provide each signal face with a detachable tunnel design visor for each signal lens. Provide a visor from 7 inches to 8 inches long for 8 inch lenses and from 9 inches to 12 inches long for 12 inch lenses. Provide a visor that encloses at least 290 degrees of the lens circumference and tilts downward from 1 degree to 10 degrees. Provide a polycarbonate visor at least 0.078 inch thick, made of one solid piece. Attach the visor to the signal section.

C. **LED Module.** LED signals and modules include circular and arrow modules, unless otherwise specified.

Provide new Department-approved LED signal of the latest model currently in production. The Engineer will not accept equipment that is no longer manufactured, even if it meets the requirements of this subsection. Install all LED signals produced by the same manufacturer at one location.

1. **Physical and Mechanical Requirements.** Provide self-contained, sealed LED module units consisting of a lens, color coded leads with pre-insulated spade lugs, LED assembly, power supply, and a one-piece neoprene gasket. Use material for the lens and module construction that meets ASTM requirements. Provide enclosures to contain the power supply or electronic components for the signal

module made of UL94 flame retardant material. If retrofitting into existing traffic signal housing, provide the LED module in a new signal door and visor assembly.

Ensure the LED assembly and the manufacturer's assembly processes provide support for the internal LED and electronic components to withstand mechanical shock and vibration in accordance with MIL STD 883, Test Method 2007. Verify that the LED vehicle signal manufacturer is ISO 9001 certified.

Protect the LED signal module against dust and moisture intrusion in accordance with the results of MIL STD 810F, Procedure I, "Rain and Blowing Rain" testing. Conduct the test on stand alone units with no protective housing.

Provide an LED signal module lens made from ultraviolet stabilized polycarbonate. Use lenses that are color tinted red, yellow, and green to match the color of the LEDs. Provide lenses that do not require special tools for replacement. Provide a hard-coated lens, or a lens that otherwise complies with the material exposure and weathering effects requirements of SAE J576. Attach the lens to the signal body using waterproof silicone seal.

Provide lenses for vehicle signals with smooth external lens surfaces and no raised features to minimize collection of dirt, diesel smoke, and other particulate contaminates, and to facilitate periodic cleaning.

Ensure each signal module identifies the manufacturer's name, model number, serial number, related voltage, and power consumption on the outside of the unit. Attach the identification tag using polyester or vinyl self adhesive labels and make visible without disassembly of the signal module. Do not use paper labels.

For each LED signal module, provide a prominent and permanent vertical indicator for the orientation of the module inside the traffic signal housing.

Provide LED modules that incorporate a dual lens approach using a single inner collimating lens and a single outer spreading lens. Provide an inner Fresnel lens that collimates the light emitted by the LED light engine and spans the full diameter of the interior of the signal. Provide an outer lens that distributes the light rays through raised optical detail on the inner surface to meet the intensity and distribution standards specified in this section.

Provide LED modules that incorporate two separate printed circuit boards, one for the LED light source, and one for the power supply. Provide LED modules consisting of high flux LEDs mounted on a metal core circuit board using thermal epoxy and LED electrical contacts soldered to the circuit board. Place a single layer of thermal transfer material between the metal core printed circuit board and the module heat sink to ensure optimum heat transfer away from the LED P-N junctions.

Provide a lens assembly that disperses the light to prevent visibility of individual LEDs from vehicles.

Provide watertight LED signals when installed in traffic signal housing. Provide the same mounting hardware for LED signal modules as used to secure incandescent lens and gasket assemblies. Ensure installation only requires a screwdriver or standard installation tool. Provide an LED signal module assembly that weighs less than 5 pounds.

Mount and solder the LED arrow module to a printed circuit board. Provide an LED arrow module that uses a single outer lens that spreads and diffuses light from the LEDs. Incorporate a black arrow mask behind the outer lens to enhance the definition of the arrow icon. Provide an outer lens with raised optical detail on the inner surface to distribute the light rays to meet the intensity and distribution standards required by this subsection.

2. **Electrical Requirements.** Provide LED signal modules that operate from a 60-hertz line frequency and over a voltage range from 80 volts to 135 volts. The Engineer will allow a change of luminous intensity no greater than 10 percent over the voltage range.

   Provide an LED signal module capable of operating over a temperature range from −40 °F to 165 °F.

   Provide each LED signal module with two color-coded, No. 18 gauge minimum, anti-capillary 39 inch long, 600 volt, jacketed wires, conforming to the requirements of the NEC, rated for service at 221 °F. Provide the LED module wire leads with insulated spade lug terminals for connecting to existing traffic signal terminal blocks.

   Provide LED signal modules with voltage surge protection to withstand high repetition noise transients and low-repetition, high-energy transients, in accordance with NEMA Standard TS-2.

Provide LED circuitry that prevents flicker at less than 100 hertz over the voltage range from 80 volts to 135 volts in accordance with ITE VTCSH.

Provide LED signals and associated on-board circuitry meeting Federal Communications Commission (FCC) Title 47, Subpart B, Section 15 regulations concerning the emission of electronic noise by Class A digital devices.

Ensure a power factor of at least 90 percent, at nominal rated voltage, at 77 °F. Ensure a total harmonic distortion (THD) of less than 20 percent at rated voltage, at 77 °F.

Ensure the failure of a single LED will not cause a loss of light from other LEDs. Provide LED ball lamps that do not lose light output from the complete module assembly as a result of the failure of a single LED.

Provide an LED module that will detect catastrophic loss of the LED load. Provide a module which, upon sensing the loss of the LED load, presents a resistance of at least 250 kilo ohms across the input power leads within 300 millisecond. The Department considers catastrophic failure of an LED light source if it fails to show visible illumination when energized in accordance Section 5.2.1 of the ITE VTCSH LED Circular Signal Supplement, dated June 27, 2005, after 75 milliseconds or Section 5.7 of the LED Vehicle Arrow Traffic Signal Supplement dated April 3, 2006.

Provide an LED signal module that is operationally compatible with current controller assemblies, including solid state load switches, flashers, and conflict monitors.

Wire the LED modules with at least No. 18 AWG, color coded thermoplastic insulated wire.

Provide a six point terminal block with screw terminals, for spade lugs of brass, stainless steel, or other non-corrosive material, for connecting wires from the LED module and the cable from the signal controller. Mount the terminal block in the center section of the signal face and provide at least 1 inch lateral clearance from the housing. Hold the terminal block in place with stainless steel screws.

Mount and locate the terminal block, and other appurtenances, in the housing to minimize the danger of electrical shock during maintenance activities.

3. **Power Consumption and Operational Range.** Provide LED traffic signal modules that meet the minimum intensity requirements while operating from temperatures of −40 °F to 165 °F for 5 years.

   Provide high flux LED capable of being driven continuously at a current of at least 350 milli-amperes with a power dissipation rating of at least 1 watt.

   Provide LEDs that do not illuminate for input voltages below 35 volts, but do illuminate for input voltages greater than 45 volts, and are regulated above 80 volts.

   Provide LED modules for traffic signals with the following characteristics:

   a. Eight inch and 12 inch red ball traffic signal modules with a maximum power consumption no greater than 6 watts and 9 watts respectively, at 120 VAC, at 77 °F;
   b. Eight inch and 12 inch yellow ball traffic signal modules with a maximum power consumption no greater than 13 watts and 19 watts, respectively, at 120 VAC, at 77 °F;
   c. Eight inch and 12 inch green ball traffic signal modules with a maximum power consumption no greater than 6 watts and 12 watts, respectively, at 120 VAC, at 77 °F;
   d. Twelve inch red arrows with a maximum power consumption no greater than 7 watts at 120 VAC, at 77 °F;
   e. Twelve inch yellow arrows with a maximum power consumption no greater than 9 watts at 120 VAC, at 77 °F; and
   f. Twelve inch green arrows with a maximum power consumption no greater than 7 watts at 120 VAC, at 77 °F.

   Ensure each LED module reaches 90 percent full illumination within 75 milliseconds of applying the nominal operating voltage. Ensure modules do not show visible illumination after 75 milliseconds of removing the nominal operating voltage.

   Provide red LEDs that use exclusively aluminum indium gallium phosphide technology, either absorbing substrate or transparent substrate, and do not exhibit degradation greater than 30 percent of the initial light intensity following accelerated life testing (operating at 185 °F and 85 percent humidity for 1,000 hours). Do not use aluminum gallium absorbing substrate technology.

   Provide green LEDs that use indium gallium nitride technology. Provide green LED traffic signal modules that do not illuminate if the applied voltage is less than 35 VAC. Provide green LEDs that illuminate, unregulated, if the applied voltage is from 45 VAC to

80 VAC. Provide green LEDs that illuminate in accordance with the ITE VTCSH, Part II, if applied voltage is from 80 VAC to 135 VAC.

Provide yellow LEDs that use aluminum indium gallium phosphide technology, absorbing substrate or transparent substrate. Provide yellow LED traffic signal modules that do not illuminate if the applied voltage is less than 35 VAC. Provide yellow LEDs that illuminate, unregulated, if the applied voltage is from 45 VAC to 80 VAC. Provide yellow LEDs that illuminate in accordance with the ITE VTCSH if applied voltage is from 80 VAC to 135 VAC.

Provide LED modules operationally compatible with NEMA TS-1 and NEMA TS-2 conflict monitoring parameters.

4. **Photometric Requirements.** Refer to Section 4, Table 1 of the ITE VTCSH LED Circular Signal Supplement dated June 27, 2005, and the LED Vehicle Arrow Traffic Signal Supplement, dated April 3, 2006, for the minimum initial luminous intensity values for the LED traffic signal module.

   Ensure the actual luminous intensity for a module does not exceed three times the required peak value of the minimum maintained luminous intensity for the signal size and color, if operated within the temperature range specified in Section 3.3.2 of the ITE VTCSH LED Circular Signal Supplement dated June 27, 2005, and the LED Vehicle Arrow Traffic Signal Supplement dated April 3, 2006.

   Ensure the uniformity of the signal output across the module lens does not exceed a ratio of 10:1 from the maximum to minimum luminance values.

   Provide LED modules with surfaces that appear uniform in illumination. Eliminate the visibility of individual LEDs to the motorist.

   Ensure the measured chromaticity coordinates of LED traffic signal modules conform to the color regions based on the 1931 CIE chromaticity diagram listed in the ITE VTCSH LED Circular Signal Supplement dated June 27, 2005.

   Ensure the dominant wavelength for individual color measurements of portions of the emitting surface of a module are within ±3 nanometers of the dominant wavelength for the average color measurement of the entire emitting surface.

   Provide LED modules operationally compatible with NEMA TS-1 and NEMA TS-2 conflict monitoring parameters.

921.03

Provide LED traffic signal modules that meet the minimum luminous intensity values listed in Table 921-1 for circular modules, or Table 921-2 for arrow modules, for 60 months.

Table 921-1
Minimum Maintained Luminous Intensity Values — VTCSH LED Circular Signal

Vertical Angle (°)	Horizontal Angle (°)	Luminous Intensity (candela) (a) (b)					
		8 in			12 in		
		Red	Yellow	Green	Red	Yellow	Green
+12.5	2.5	17	41	22	37	91	48
	7.5	13	33	17	29	73	38
+7.5	2.5	31	78	41	69	173	90
	7.5	25	62	32	55	137	71
	12.5	28	45	24	40	100	52
+2.5	2.5	68	168	88	150	373	195
	7.5	56	139	73	124	309	162
	12.5	38	94	49	84	209	109
	17.5	21	53	28	47	118	62
	22.5	12	29	15	26	64	33
−2.5	2.5	162	402	211	358	892	466
	7.5	132	328	172	292	728	380
	12.5	91	226	118	201	501	261
	17.5	53	131	69	117	291	152
	22.5	28	70	37	62	155	81
	27.5	15	37	19	33	82	43
−7.5	2.5	127	316	166	281	701	366
	7.5	106	262	138	234	582	304
	12.5	71	176	92	157	391	204
	17.5	41	103	54	91	228	119
	22.5	21	53	28	47	118	62
	27.5	12	29	15	26	64	33
−12.5	2.5	50	123	65	110	273	143
	7.5	40	98	52	88	218	114
	12.5	28	70	37	62	155	81
	17.5	17	41	22	37	91	48
	22.5	8	21	11	18	4	24
	27.5	5	12	6	11	27	14
−17.5	2.5	23	57	30	51	127	67
	7.5	18	45	24	40	100	52
	12.5	13	33	17	29	73	38
	17.5	7	16	9	15	36	19
	22.5	3	8	4	7	18	10
−22.5	2.5	17	41	22	37	91	48
	7.5	13	33	17	29	73	38
	12.5	10	25	13	22	55	29
	17.5	5	12	6	11	27	14
−27.5	2.5	12	29	15	26	64	33
	7.5	8	21	11	18	46	24

a. Luminous intensity values for equivalent left and right horizontal angles are the same.
b. Tabulated values of luminous intensity are rounded to the nearest whole value.

Table 921-2
Minimum Maintained Luminous Intensity Values for the VTCSH LED Vehicle Arrow Traffic Signal

Vertical Angle (°)	Horizontal Angle (°)	Luminous Intensity (candela) (a) (b) 12 in arrow		
		Red	Yellow	Green
+12.5	2.5	6	15	8
	7.5	5	12	6
+7.5	2.5	11	28	14
	7.5	9	22	11
	12.5	6	16	8
+2.5	2.5	24	60	31
	7.5	20	49	26
	12.5	13	33	17
	17.5	8	19	10
	22.5	4	10	5
−2.5	2.5	57	143	75
	7.5	47	116	61
	12.5	32	80	42
	17.5	19	47	24
	22.5	10	25	13
	27.5	5	13	7
−7.5	2.5	45	112	59
	7.5	37	93	49
	12.5	25	63	33
	17.5	15	36	19
	22.5	8	19	10
	27.5	4	10	5
−12.5	2.5	18	44	23
	7.5	14	35	18
	12.5	10	25	13
	17.5	6	15	8
	22.5	3	7	4
	27.5	2	4	2
−17.5	2.5	8	20	11
	7.5	6	16	8
	12.5	5	12	6
	17.5	2	6	3
	22.5	1	3	2
−22.5	2.5	6	15	8
	7.5	5	12	6
	12.5	4	9	5
	17.5	2	4	2
−27.5	2.5	4	10	5
	7.5	3	7	4

a. Luminous intensity values for equivalent left and right horizontal angles are the same.
b. Tabulated values of luminous intensity are rounded to the nearest whole value.

D. **Electrical Wiring.** Provide stranded wire electrical wiring meeting the requirements of ITE Standards. Equip each signal with a non corrosive barrier-type terminal block with at least four terminals; one for each optical unit and one common terminal. Mount the terminal block in the center section without interfering mechanically with other components of the signal. Locate the terminal block in the housing to minimize the danger of electrical shock during maintenance activities.

Electrically and mechanically secure the wiring by fastening to the lamp receptacle. Insulate exposed, current carrying parts. Use pre-insulated fork-type terminals on the wires at the terminal block connection.

Do not use pressure type terminal blocks.

E. **Mounting Assemblies.** Provide mounting assemblies that include the hardware for complete assembly of the signal.

1. **Pipe.** For mounting assemblies, use rigid conduit of 1 inch standard steel pipe with tapered threads. Do not use straight threads. Install plastic thread protectors for exposed pipe threads to protect the threads during shipping.

2. **Hub or Center Fitting.** Provide a hub of malleable iron with a nominal 3 inch by 3 inch opening to draw wires and make connections. Secure the cover for the opening with two ⅜ inch by ½ inch hexagon head, 300 Series stainless steel screws. Close unused openings in the hub with ferrous or aluminum ornamental closures.

3. **Arms.** Provide pipe arms from the center hub to position the centers of the signal face housings on a radius of 8¾ inches ±¼ inch from the hub for 8-inch signals, and a radius of 10¾ inches ±¼ inch from the hub for 12-inch signals.

4. **Fittings.** Use ferrous pipe crosses to make right angles in mounting frames. Close unused openings of the pipe crosses with ornamental closures. Do not use set screws in pipe crosses.

   Provide malleable iron fittings are free of flash and voids.

5. **Assemblies.** Construct the bottom portion of the side post mounting assemblies of 1½ inch standard steel pipe and fittings. Attach the bottom portion of the span mounting assembly to signals using a flat, aluminum spacer, of one-piece construction or welded, with aluminum closures. Do not use rivets.

6. **Finish.** Provide pipes and fittings with internal surfaces that are free of sharp edges and burrs.

7. **Cable Entrance Fitting.** Provide fittings of one-piece construction, made of malleable iron. Provide the wire outlet with a composition bushing with opening to accommodate a multi-conductor cable, 1 inch in diameter. Provide the threaded end of the fitting with a threaded nipple, two 1½ inch malleable iron locknuts, and a stainless steel cotter key.

8. **Span Wire Fitting.** Provide fittings of malleable iron to accommodate ¼ inch to ⅜ inch messenger wire with a 1⅝ inch diameter pin and 3/32 inch by 1-inch stainless steel cotter key. Locate the pin 3 7/16 inches from where the span cable seats into the saddle part of the fitting. Provide a saddle part 9 inches long.

9. **Span and Cable Entrance Assembly.** Provide a span and cable entrance assembly that allows the signal assembly to swing in any direction and return to the vertical position without placing stress on the span wire.

10. **Signal Head Attachment.** Provide the top outlet of each signal bracket with a nipple and either a watertight metal gasket with retainer to restrict the flow of the gasket or one flat stainless steel washer and one malleable iron hexagon nut, ½ inch thick.

    Provide a nipple of a length to allow the use of the gasket or nut and washer.

F. **Paint and Color.**

1. **Mounting Assemblies.** Clean and surface treat the surfaces of mounting assemblies in accordance with standard industry practice, to ensure bonding of the paint to the metal. After preparation, paint surfaces with durable weather resistant semi-gloss or gloss yellow enamel.

   Apply the enamel at an average dry film thickness of 1.5 mils, without blisters, runs, or other defects. Determine the dry film thickness using Method A, Inductance Thickness Gauge, as specified in ASTM D 1400. Ensure the color matches the central color within the limits shown on the current FHWA Highway Yellow Color Tolerance Chart, except do not use a color darker than the central color.

2. **Signal Faces.** Provide signal faces with the yellow color specified in subsection 921.03.F.1, permanently molded into the signal door, housing, and visors. Provide the inside of the visors with a finish coat of flat black paint, compatible with polycarbonate plastic.

G. **Packing and Marking.** Pack each traffic signal separately to prevent damage or defacement to the signal and mounting assembly during transportation to the project. Legibly mark each carton with the signal and mounting assembly description and supplier's name.

H. **Quality Assurance.** Provide LED modules that comply with the quality assurance production testing, inspection, and design, as specified in the ITE VTCSH, LED Circular Signal Supplement dated June 27, 2005, and LED Vehicle Arrow Traffic Signal Supplement dated April 3, 2006.

I. **Tests, Inspection, and Sampling.** Test each LED module and inspect before shipment. Reject pieces of equipment that fail to meet the requirements of this section.

J. **Drawings and Information.** If required, provide two copies of drawings of the signal head and LED module showing manufacturer's part numbers.

Provide the independent test lab reports showing that proposed material meets or exceeds the requirements of this section and Quality Assurance Testing and Inspection per Section 6 of the ITE VTCSH, LED Circular Signal Supplement dated June 27, 2005 and LED Vehicle Arrow Traffic Signal Supplement dated April 3, 2006. Failure to provide the independent lab test reports will be cause for rejection.

The Engineer will hold the information required by this subsection, along with a sample, if requested, as standards for acceptance.

921.04. Pedestrian Signals and Countdown Type. Unless otherwise required, provide pedestrian signals and countdown pedestrian signals meeting the requirements of the ITE Standard for "Adjustable Face Pedestrian Signal Heads" and the "LED Performance Specifications of the Pedestrian Traffic Control Signal Indications (PTCSI)" Part 2, "Pedestrian Traffic Signal Modules." The pedestrian signal indications include the LED signal modules, countdown, socket assembly gaskets, reflector and door assembly, housing, visors, optical units, wiring, and mounting assemblies.

Provide LED pedestrian signal modules capable of displaying the ITE specified symbolic full icon "hand" or "walking person" legends, using a one-piece section that includes a nominal message-bearing surface size of 12 inches by 12 inches.

Provide LED countdown pedestrian signal modules capable of exhibiting two, seven-segment digital numerical digits that display the remaining time to clear the intersection, and the traditional full icon "hand" or

"walking person" legends using a one-piece section that includes a nominal message-bearing surface size of 16 inches by 16 inches.

A. **Housing.** Provide housing for each section as a one-piece, black polycarbonate resin material with front, sides, top, and bottom integrally molded. Provide housing at least 3/32 inch thick, ribbed to produce a strong assembly, and lightweight. Provide two sets of internal bosses in the section for mounting terminal strip facilities horizontally. Attach a six-position terminal block with screw terminals for spade lugs to bosses with two self-tapping stainless steel screws.

Provide each signal section with a 2 inch diameter round hole top and bottom to receive a 1½ inch supporting pipe. After assembling the sections, ensure a 1 inch cable can pass through the head without damage or excessive labor.

Provide a variable pressure-type door latch, bolt and wing nut, of American Iron and Steel Institute (AISI) 300 Series stainless steel, or approved equal.

Provide signal sections with a "hand" and "walking person" symbolic icon signal face of an over-all height of at least 14 inches.

For fasteners partially or fully exposed on the exterior of the assembled housing, provide AISI 300 Series stainless steel fasteners. For other screws, bolts, nuts, and hinge pins on the interior of the housing, provide AISI 300 Series stainless steel, brass or aluminum fasteners. Do not use plastic fasteners to secure the door.

B. **Visor.** Provide signal heads with visors attached that encompasses the top and two sides of the lens for each signal indication. Provide a visor made of black polycarbonate resin at least 0.070 inch thick, attached to the door and signal section with at least four AISI 300 Series stainless steel screws. Provide a visor that fits tightly against the door and does not allow perceptible filtration of light between the door and the visor. Provide a visor that is detachable and 10 inches long or 6¾ inches long for countdown pedestrian signals. Provide a visor mounting system allows handling of the signal head by the visor.

C. **LED Module.** Provide new LED pedestrian signals of the latest models currently in production. The Engineer will not accept equipment no longer manufactured, even if it meets the requirements specified in this subsection. Install all LED signals produced by the same manufacturer in one location.

Provide LED pedestrian signals that achieve the minimum intensity requirements of the ITE photometric test criteria.

1. **Physical and Mechanical Requirements.**

   a. **General.** Make each LED module a self contained unit.

   Ensure the module the manufacturer's LED assembly process provide support for the internal LED and electronic components to withstand mechanical shock and vibration. Ensure the LED signal manufacturer is ISO 9001 certified.

   Protect the LED signal module against dust and moisture intrusion in accordance with the requirements of MIL 810F, Procedure I, "Rain and Blowing Rain" for protecting internal LED, electronic, and electrical components. Conduct the test on a stand alone unit, with no protective housing required.

   Provide an LED signal module made of ultraviolet, stabilized polycarbonate. Provide LED signal modules with a lens that is tinted or uses transparency film, or materials with similar characteristics. If requested by the Engineer, use a surface coating or film on a non fused polymeric lens to provide front surface abrasion resistance.

   Provide pedestrian signals with smooth external lens surfaces with no raised features, to minimize the collection of dirt, soil, diesel smoke, and other particulate contaminates, and facilitate periodic cleaning.

   Identify each LED signal module with the manufacturer's name, model number, serial number on the outside of the unit, rated voltage, and power consumption. Ensure the identification tag is visible without disassembling the signal module.

   Provide LED signal modules with a prominent and permanent vertical indication to orient the module inside pedestrian signal housing.

   b. **LED Assembly.** Provide LED assemblies that consist of an LED array mounted to a printed circuit board and sealed in a polycarbonate cover assembly. Secure the cover assembly to a 12 inch polycarbonate, or 16 inch for countdown, clear matte signal lens. Provide the assembly with No. 18 AWG, anti-capillary, 39 inch, color-coded leads, meeting the requirements of the NEC with insulated spade lug terminals for attachment to the signal terminal block.

   The retrofit assembly requires removal of the existing housing and mounting assembly and reconfiguration of the mounting

brackets to accommodate the one piece LED pedestrian signal housing.

Provide retrofit replacement modules, built for the PTCSI sizes of the “hand” and “walking person” icon pedestrian standards that fit into existing signal housings, without modifying the housing. The retrofit will require removing the existing reflector, lens, and door. Install the LED module in place of the removed lens, reassemble the door using the existing hinge pins, and connect the leads from the LED module to the existing terminal block.

Provide enclosed units that do not expose circuit boards with LEDs.

Do not use screw-in type products.

c. **LED Array.** Provide LED arrays that consist of a highly visible full icon symbol of the “hand” and “walking person.” Use a “hand” symbol that is at least 9 inches tall and consists of Portland Orange LEDs. Use a “walking person” symbol that is at least 9 inches tall and consists of Lunar White LEDs. Provide the symbols that are at least 5¼ inches wide. Provide wires at least No. 18 AWG with thermoplastic insulation.

Provide an LED countdown array that consists of a highly visible full icon symbol of the “hand” and “walking person”. Ensure the “hand” symbol is at least 11 inches tall and consists of Portland orange LEDs. Use a “walking person” symbol that is at least 11 inches tall and consists of Lunar White LEDs. Provide symbols that are at least 6½ inches wide. Provide units with countdown digits that are at least 9 inches tall and consist of two rows of Portland orange LEDs. Provide wires at least No. 18 AWG with thermoplastic insulation.

Provide Portland orange T-1 LEDs that use aluminum indiun gallium phosphate technology, 605 nanometers. Provide white T-1 LEDs that use indium gallium nitride technology.

2. **Electrical Requirements.** The minimum performance requirements for LED pedestrian signals and countdown modules include the following:

a. LED signal modules operate from a 60 hertz line frequency, over a voltage range from 80 VAC to 135 VAC, with a luminous intensity change no greater than ±10 percent.
b. Provide a nominal operating voltage of 120 VAC root mean square (RMS) for all measurements.

c. Each LED signal module has two color coded, minimum No. 18 AWG, 39 inch, 600 volt, jacketed wires, meeting the requirements of the NEC, and rated for service at 221 °F. Provide the wire leads with pre-insulated spade lug terminals for connecting to existing traffic signal terminal blocks.
d. LED signal modules include voltage surge protection to withstand high repetition noise transients, and low repetition, high energy transients as specified in Section 2.1.8 of NEMA Standard Publication TS-2.
e. LED circuitry prevents flicker at less than 100 Hertz over the voltage range specified in Section 5.2 of the LED Performance Specifications.
f. LED signals and associated on-board circuitry meet the requirements of FCC Regulations Title 47, Sub Part B, Section 15 concerning electronic noise emissions.
g. LED modules provide a power factor of at least 90 at the nominal rated voltage, at 77 °F. The total harmonic distortion is less than 20 percent at the rated voltage, at 77 °F.
h. LEDs are connected in series parallel strings so LED burnouts result in a single point failure. The current draw ensures compatibility and proper triggering and operation of load switches.
i. The maintained minimum luminance value for the LED modules' "walking person" icon remains at 2,200 candelas per square meter for at least 60 months.
j. The maintained luminance value for the LED modules' "hand" icon remains at 1,400 candelas per square meter for at least 60 months.
k. Each module icon reaches 90 percent full illumination within 75 milliseconds of applying the nominal operating voltage.
l. Modules do not illuminate after 75 milliseconds of removing the nominal operating voltage.

Provide a six-point terminal block with screw terminals for spade lugs for connecting wires from the LED module and incoming wires from the controller. Centrally locate the terminal block in the housing and provide at least 1 inch lateral clearance from the housing.

3. **Power Consumption and Operational Range.** Provide LED pedestrian traffic signals that consume no more than 8 watts for the "hand" icon, 6 watts for the "walking person" icon, and 5 watts for the countdown digits, at 120 VAC, 0.90 power factor at 77 °F.

Provide LED signals that operate over a temperature range from −40 °F to 165 °F, with no more than a 10 percent change in luminous intensity over the required voltage range.

Ensure the luminance uniformity of the “walking person” and “hand” icons does not exceed a ratio of 1:10 from the minimum to maximum luminance values, as measured in ½ inch diameter spots.

If operating within the temperature range, ensure the luminance of the module does not exceed three times the minimum luminance of the modules.

Provide LED pedestrian countdown modules with a uniform appearance when illuminated. Provide LED pedestrian countdown modules that do not present a pixilated appearance.

4. **Photometric Requirements.** Provide the minimum initial luminous intensity values for the LED traffic signal module specified in Section 4 of the LED Performance Specifications.

   Provide LED pedestrian signal modules meeting the minimum intensity requirements while operating over a temperature range from −40 °F to 165 °F.

   Provide LED traffic signal modules with measured chromaticity coordinates that meet the requirements of Section 4 of the LED Performance Specifications.

   Retain a certified independent test lab to provide test data to verify that pedestrian signal performance meets the requirements of Section 6 of the LED Performance Specifications. To test, control and monitor the “walking person,” “hand,” and countdown digits separately, provide three wires for electrical connection to the “walking person” and “hand,” and provide three wires for the countdown digits.

5. **Countdown Timer.** Provide a micro-controller based countdown timer. Provide a timer that counts down only during the pedestrian clearance intervals, continuously monitors the pedestrian clearance interval, and automatically adjusts for changes made at the controller. If the flashing “hand” icon becomes solid, ensure the module displays a zero for 1 second and then blacks out. Ensure the countdown display remains dark until the beginning of the next countdown.

   If a pre-emption sequence begins, ensure the countdown module skips the pre-empted clearance time and reaches zero at the same time as the flashing “hand” becomes solid. In the cycle following a

pre-emption call, ensure the signal displays the correct time. Ensure the countdown remains synchronized with the signal indications and always reaches zero at the same time the flashing “hand” becomes solid.

Provide the LED module with a removable plug on the rear of the unit to allow access to dip switches for selecting the following features:

a. 1 – Display zero during stand by;
b. 2 – Turn on LEDs for testing;
c. 3 – Countdown walk, plus clearance time; and
d. 4 – Disable countdown display.

Provide the countdown module with an internal conflict monitor to prevent conflicts between the “walking person” and the “hand” icons and the countdown digits display. Provide a conflict monitor that prevents the display from counting down during a steady “hand” indication.

D. **Electrical Wiring.** Provide electrical wiring that consists of stranded wire, meeting the requirements of the ITE VTCSH. Equip each pedestrian signal with a barrier-type terminal block with at least three terminals, one for each optical unit and one common terminal.

Mount the terminal block so it does not interfere mechanically with other components of the signal. Electrically and mechanically secure the wiring to a lamp receptacle. Insulate exposed current-carrying parts to prevent electrical shock hazard. Use pre-insulated fork-type terminals on the wires at the terminal block connection. Do not use pressure-type terminal blocks.

E. **Mounting Bracket Frame Assembly and Fitting.** Construct the mounting frame assembly and fittings entirely weather-tight. Reference MDOT typical signal construction details to reflect the new straight arm length needed for the countdown pedestals. Provide arms for the mounting assembly of 1½-inch standard steel pipe of a length to provide the following dimensions, within a tolerance of ±¼ inch:

1. For overhead and pedestal mountings, a radius of 8¾ inches from center of hub to center of pipe cross; and
2. From the center of the first pipe cross, 11½ inches for I-brackets and T-brackets, 14½ inches for countdown brackets.

Ensure the internal surfaces of pipes and fittings are free of sharp edges and burrs. Use ferrous pipe crosses to make right angles in the

mounting assembly. Close unused openings of the pipe crosses with ornamental closures. Provide malleable iron adapters or slip fitters.

Provide malleable iron fittings free of flash and voids.

Install a plastic thread protector on exposed pipe threads to protect the threads from damage during shipping.

F. **Painting Requirements.** Before painting the mounting brackets, clean and treat the ferrous and aluminum surfaces in accordance with standard industry practice for each type of metal to ensure bonding of the paint to the metal.

Provide a coating system for the mounting bracket assembly consisting of durable and weather-resistant black enamels, applied at a uniform thickness without blisters, runs, or other defects. Provide an average dry film thickness of 1.5 mils as determined by Method A, Inductance Thickness Gauge, as specified in ASTM D 1400.

Provide black LED pedestrian traffic signals. Provide visors with an inside surface painted flat black, compatible with polycarbonate plastic.

Provide signal parts with a color and finish that does not require painting to maintain a functional appearance. Ensure scratches on signal parts do not expose uncolored material.

Clean and pretreat metal surfaces of pedestrian signal mounting brackets, before painting and assembly, to ensure phosphate coating bonds to the surfaces in accordance with Federal Specifications TT C 490, “Cleaning Methods and Pretreatment of Ferrous Surfaces or Organic Coatings.”

Use semi-gloss or glossy black enamel to finish coat other exterior surfaces of the fittings, except stainless steel latch bolts and clips.

G. **Packing and Marking.** Pack each pedestrian signal separately to prevent damage or defacement to the pedestrian signal and mounting assembly during transportation to the project. Mark each carton legibly with the pedestrian signal and mounting assembly description and supplier’s name.

H. **Quality Assurance.** Provide LED modules that comply with the quality assurance production testing, inspection, and design specified in the ITE PTCSI Part 2 “Pedestrian Traffic Signal Modules,” adopted 2004.

I. **Tests, Inspection, and Sampling.** Test each LED and inspect for conformance with this section before shipment. Reject pieces of equipment that fail to meet the requirements of this section. Ensure a certified independent test lab provides test data to verify pedestrian

signal performance meets the requirements of Section 6 of the LED Performance Specifications.

J. **Drawings and Information.** If required, provide the Engineer two copies of a detailed drawing and material specification list of the pedestrian head.

Provide LED pedestrian signal modules that comply with the quality assurance production testing and inspection requirements specified in Section 6 of the LED Performance Specifications.

Provide a test report in accordance with subsection 921.04.I from an independent lab certifying pedestrian signals meet the requirements of the LED Performance Specifications.

The Engineer will hold the information required by this subsection 921.04.J, along with a sample, if requested, as standards for acceptance.

921.05. Traffic Signal Strain Pole.

A. **Shaft Assembly and Fabrication.** Provide traffic signal strain poles fabricated from high-strength steel, meeting the requirements of ASTM A 572, for Grade 345, galvanized after fabrication in accordance with ASTM A 123.

Provide a tapered shaft with a circular or at least an eight-sided polygonal cross section.

Provide a shaft in one continuous length with no more than one longitudinal weld. Provide a longitudinal weld that is rolled or ground smooth. Do not provide poles with transverse welds, except where the anchor base is welded to the shaft.

Provide a shaft attached by two continuous welds to a steel anchor base meeting the requirements of ASTM A 36, or an approved equal. Provide one weld on the inside of the base at the end of the shaft, and the other weld is on the outside, at the top of the base. Place the two welds at least 2 inches apart. Ensure the base and welded connection develop the full strength of the shaft.

Provide a base with four evenly spaced holes for bolting the standard to a concrete foundation. Thirty foot and 36 foot poles require four holes for 1¾-inch anchor bolts in an 18-inch bolt circle diameter. Forty-foot poles require four holes for 2-inch anchor bolts in an 18-inch bolt circle diameter.

Provide a handhole opening and cover. Provide a handhole opening with a reinforcing frame welded to the shaft. Provide a handhole that

does not reduce the strength of the shaft. Provide stainless steel hex head cap screws or an approved locking device to fasten the handhole cover.

Provide a base with a lower surface that is finished flat and attached to the shaft axis at 90 degrees. Provide a base with an opening of at least 6½ inches in diameter allowing cables from three 3 inch and one 1½ inch ducts to enter into the foundation.

Provide a pole top with means for securing to the top of the shaft.

Provide a hook or other device for supporting a cable on the inside of the shaft near the top.

For grounding purposes, weld a standard ½ inch nut to the inside of the shaft, accessible from the handhole.

Provide each pole with three pole bands for attaching the traffic signal span, minor cable span, and service rack. Only attach one of these spans or racks to each pole band.

B. **Strength Requirements.** Provide a standard capable of withstanding a transverse load of at least 3,700 pounds applied 18 inches below the top of the shaft without exceeding the elastic limit. Ensure the deflection of the shaft does not exceed 0.40 inch per 100 pounds of transverse load applied at the same point.

C. **Air Circulation.** Make provisions for free air circulation inside the shaft to remove moisture caused by condensation, or from other sources.

D. **Anchor Bolts.** Provide anchor bolts meeting the requirements of subsection 908.15.C, including elongation and reduction of area requirements. Charpy V-Notch testing is not required. After threading, hot-dip galvanize at least 20 inches on the threaded end of anchor bolts in accordance with ASTM A 153.

E. **Repairing Galvanized Surfaces.** Repair spelter coating damaged in transporting, handling, or erection in accordance with subsection 716.03.E, at no additional cost to the Department.

F. **Identification of Manufacturer.** Provide standards with a catalog or other manufacturer's identification number permanently marked on the base.

921.06. Traffic, Pedestrian Signals, Pushbutton Pedestals. Provide pedestals for mounting pedestrian pushbuttons with signs, or traffic and pedestrian signals equipped with slip fitters for 4 inch nominal size pipe.

Provide pedestals of the overall height shown on the plans or as directed by the Engineer.

Provide pedestals meeting the minimum requirements of this subsection. Provide a base designed for a 12¾ inch bolt circle diameter.

Provide a pedestal made with a cast aluminum base with an aluminum shaft threaded into the base. Secure the shaft by a stainless steel set screw to prevent loosening or turning after installation.

A. **Shaft.** Provide extruded aluminum pedestal shafts meeting the following characteristics:

1. Aluminum alloy meeting the requirements of ASTM B 308 6063-T6,
2. Tensile strength of 30 ksi,
3. Yield strength of 25 ksi,
4. Elongation of 10 percent,
5. Walls 0.237 inch thick, and
6. Outside diameter of 4½ inches.

Provide threaded and de-burred pedestal shafts that conform to the basic dimensions of ASME B1.20.1, for taper pipe threads (NPT). Ensure the threaded end of the pedestal shaft has 4 inches of NPT thread. Equip pushbutton pedestals with a standard 4-inch pipe cap.

B. **Finish.** Do not paint aluminum pedestals. Provide aluminum shafts with the minimum finish requirements specified in this subsection.

1. **Finish Type.** Provide a shaft with the full length covered with a tough surface texture that is not a mill finish, consisting of a uniform grain pattern perpendicular to the axis of the shaft.

2. **Texture Profile.** Ensure the grain profile has a surface roughness of at least two, but no greater than four times a roughness average (Ra) of 250 microinches. Provide aluminum pedestal shafts free of the following:

    a. Excessive material;
    b. Heat discoloration of material;
    c. Irregular grain spacing and grain patterns;
    d. Waviness;
    e. Scratches or marks of varying depths and sizes;
    f. Holes;
    g. Ridges;
    h. Cracks; and
    i. Other surface defects, not removed in the finish process.

C. **Mill Certification.** Require the manufacturer to maintain reports and provide copies to the Department on request.

D. **Hardware.** Provide the pedestal complete with foundation bolts having a diameter of at least ¾ inch and 21 inches long with a 3-inch L-bend on the unthreaded end.

Equip foundation bolts with hexagonal nuts and washers. Ensure the threaded end of the bolts are threaded for at least 3 inches. Electro-galvanize bolts after threading in accordance with ASTM B 633, Service Condition 4 for the entire length, or hot-dip galvanize in accordance with ASTM A 153. Provide nuts that are galvanized using similar methods as used on the bolts, and ensure nuts turn freely on the bolts after galvanizing. Provide a level foundation surface to accept the base assembly.

Hold the access door in the base of the pedestal in place with an AISI, 300 Series stainless steel machine screw.

E. **Drawings.** Provide two copies of detailed dimensional and installation drawings to the Engineer.

F. **Packaging.** Provide a protective cap for the threaded end of bolts to prevent thread damage. Provide a cardboard sleeve that covers the entire length of shaft to protect surface finish.

921.07. Illuminated and Non-illuminated Case Signs. Provide LED case signs internally illuminated by LEDs and changeable message case signs internally illuminated with halogen type lamps. Ensure signs are designed to operate on 120 volt, single-phase AC electrical systems. Work includes a retrofit unit capable of removing and replacing the LED light module and associated material of an existing internally illuminated case sign.

Provide non-illuminated case signs equipped with retroreflective case sign panels.

Ensure well-fitted, free-moving doors and other moving components. Provide signs of the sizes shown on the plans. Mount signs as shown on the plans.

A. **Hardware.** For fasteners partially or completely exposed on the exterior of case signs, provide AISI, 300 Series stainless steel fasteners. Provide a mounting hub for case signs of 1½ inch, malleable iron, KK-197, four-bolt mounted on the top center of the sign.

B. **Housing and Door Requirements.**

1. **Housing for LED and Non-Illuminated Case Signs.** Provide one-way and two-way housings constructed of a minimum 0.080 inch thick extruded aluminum.

   Provide four-way housings constructed with a minimum 0.063 inch thick aluminum body and a 1.5 inches by 1.5 inches by ⅛ inch thick channeled aluminum framework.

   Place a 1 inch, screened drain hole at each of the four corners of the housing bottom.

2. **Housing for Changeable Message LED Case Sign.** Provide case sign housing constructed of a minimum 0.125 inch thick extruded aluminum with a 0.063 inch thick flat aluminum back welded at the back.

   Provide a back capable of being inserted into a slot designed in the backside of the extrusion. Ensure the slot directs water out of the housing. Ensure corners are TIG welded to provide a weatherproof seal around the entire housing.

3. **Doors for LED Case Signs.** Provide doors for four-way case signs constructed of a minimum 0.080 inch thick extruded aluminum. Provide doors for the one and two-way case signs constructed of a minimum 0.080 inch thick extruded aluminum. Fasten doors to the housing by a full length stainless steel hinge. Secure doors onto a 1 inch wide by 5/32 inch thick neoprene gasket with one or two ¼ turn Link Locks.

4. **Doors for Non-Illuminated Case Signs.** Provide doors constructed of a minimum 0.080 inch thick extruded aluminum. Fasten doors to the housing by a full length, 0.040 inch by 1½ inch open stainless steel hinge. Secure doors onto a 1 inch wide by 5/32 inch thick neoprene gasket with one or two ¼ turn Link Locks.

   Provide single or double sided signs with a hinged, extruded aluminum service door to provide access to either side for service. Provide a sign capable of displaying messages in from one to four directions.

5. **Doors for Changeable Message Case Signs.** Provide doors constructed of 0.125 inch thick extruded aluminum. Ensure two corners are TIG welded and two corners screwed together to make one side of the door removable for installation of the Fiber Optic Module. Fasten the door to the housing on the left using a full length, 0.040 inch by 1¼ inch open stainless steel hinge. Secure the

door onto a 1 inch wide by 5/32 inch thick neoprene gasket using two ¼ turn Link Locks.

Provide single or double sided signs with a hinged, extruded aluminum service door to provide access to either side for service. Provide signs capable of displaying messages in one or two directions.

Ensure the sign door allows full access to serviceable components of the sign.

Fit a three sided visor made of 0.63 inch think aluminum to the door to act as a sunshade and improve the visibility of the message.

C. **LED Case Sign Electrical Requirements.** Provide an LED case sign designed to operate on 120 VAC, 60 hertz, single phase. Ensure the LED current operates at the manufacturer's recommended current by reducing the input voltage and providing power conditioning circuitry.

Where conductors pass through sheet metal or conduit, provide bushings, grommets, or rolled edges on the edges of openings, to protect conductors from abrasion.

1. **LED Light Module.** Provide LED light modules consisting of LEDs that provide at least 250 candelas per square meter, or an equivalent surface luminance of 1,000 lux over an ambient temperature range from −40 °F to 165 °F, consistent with the NEMA temperature specifications. Ensure the LED light modules contain a quantity of white LEDs to uniformly illuminate the viewing area.

   Provide LED light modules that consist of a circuit board comprised of an insulated aluminum substrate, at least 0.050 inch thick.

   Ensure the LED light module operates for at least 50,000 hours with a lumen depreciation no greater than 30 percent. Ensure the LED supplier provides operational documentation, if requested, based on actual temperature measurements taken after 12 continuous hours of operation, correlated against lumen depreciation and LED mortality curves.

   Ensure the LED light engine electronics are entirely conformally coated with at least a 0.002 inch dry coat, to protect the light engine from moisture and corrosion. Ensure LED modules are reduction of hazardous substances (ROHS) compliant.

   Attach the LED light module to the case sign housing to allow the module to remain in place during maintenance or retrofit activities. Ensure the LED light module passes the tests specified in subsection

921.07.C.1.a and subsection 921.07.C.1.b, in accordance with the NEMA Standards.

a. **Thermal Shock Test.** Perform the thermal shock test on LED light modules at temperatures of 85 °F and −40 °F for five cycles of 2 hour dwells with a 2 hour presoak at −40 °F.

b. **Salt Spray and Soak Test.** Ensure LED light module endures 48 hours of continuous salt spray and 240 hours of salt water soak.

Ensure the manufacturer burns-in LED light modules for 24 hours and certifies for compliance. Ensure the manufacturer mounts a quality control (QC) tracking sticker and the manufacturer's name and date of manufacture on the inside of the LED light module.

Ensure the LED light modules do not exceed a 59 °F temperature rise under continuous operating conditions.

Paint the panels white and ensure panels meet GM4901 Specifications.

2. **Power Consumption and Power Supply Panel.** Provide LED case signs with the maximum power consumption wattage as follows:

Table 921-3
LED Case Sign Maximum Power Consumption

Case Sign Size	Power Consumption
1-Way 12 in × 27 in	15 watts
4-Way 12 in × 27 in	60 watts
1-Way 24 in × 30 in	45 watts
2-Way 24 in × 30 in	90 watts
4-Way 24 in × 30 in	180 watts

Provide at least 75-watt power supply units rated by the UL for Class 2 operation, 24 volts Direct Current (DC), and Ingress Protection (IP66) rated.

Provide a terminal block for the incoming 120 VAC power. Connect the output of the 24-volt power supply to a two-wire connector that attaches to the LED light modules.

3. **LED Retrofit Assembly.** Provide LED retrofit assemblies meeting the requirements of this subsection. that do not alter the structural properties or functional requirements of the case sign.

D. **Changeable Message Case Sign Electrical Requirements.** Provide changeable message signs capable of displaying three distinct fiber optic type messages. Provide the case sign, hardware, fittings,

cable, and one message, clearly and legibly displayed under any lighting conditions when energized. Refer to the FHWA and MMUTCD legends for single or multi-message overlays.

Provide a changeable message sign that forms the message with a single or double row of fiber optic glass bundles. Provide energized bundles that are highly visible within a 60-degree cone, centered around the optic axis.

1. **Fiber Optic Module.** Provide a fiber optic module consisting of a flat black, aluminum alloy, 3003 H14 faceplate, 0.080 inch thick, with the fiber optic assembly directly mounted to it. Insert the assembly into the rear track of the extruded aluminum door.

   Secure glass, fiber optic bundles into an end tip using epoxy at the termination end, and the common assembly at the other end. Grind smooth and optically polish to ensure maximum light transmission through the bundle.

   Insert the end tip of black nylon into a punched hole in the black faceplate and mechanically hold in place with four crush ribs along the outside diameter of the end tip. Ensure the end tip, if installed on the faceplate, does not protrude more than $^{5}/_{16}$ inch.

   Ensure the LED light sources provide the message colors. Provide LED light sources capable of being changed in the field by replacing the solid state LED lamp without removing the sign from the case. Mount the LED light source with four No. 8 × ⅜ stainless steel screws between the common assembly and the LED lamp. Provide LED light sources that sustain an average 50,000 hour life.

   Provide messages illuminated by at least two light sources, based on the message. Arrange the glass bundles so if one light source fails the other sources continue to provide a legible message by lighting every other point in the message. Ensure no color appears in the output points if the source is not energized, regardless of ambient light condition.

   Provide messages that are clearly legible, and attract attention under any lighting conditions. Ensure the sign is highly visible at full intensity within a 20-degree cone, centered around the optic axis.

   Provide a ⅛ inch thick matte or clear polycarbonate lens with anti glare characteristics to protect the LED assembly. Insert the lens into the front track in the door.

2. **Lamps and Drivers.** Use solid state LED lamps to illuminate the messages. Use two lamps per message to provide fail safe operation in the event of lamp failure.

   Provide a 5-watt, LED type, or Department-approved equal LED lamp, based MR 16 traditional halogen package, rated for 50,000 hours life.

   Use LED drivers to reduce the incoming 120 VAC to the lamp manufacturer's suggested operating voltage and current. Provide UL Class 2 rated LED drivers that operate at temperatures from −40 °F to 176 °F. Provide LED drivers rated for 50,000 hours of life. Ensure LED drivers provide a consistent light output across the line and load levels. Use a separate LED driver with each lamp to provide failsafe protection.

   Provide a barrier-type terminal strip, Weco 324/HDS/12-type or Department-approved equal, for electrical connection of field wires.

   Provide signs capable of continuous operation over a range of temperatures from 35 °F to 140 °F.

   Include supplementary markings to indicate the correct method of connection for the leads.

E. **Face.**

1. **LED Case Sign.** Provide an LED case sign face that is Lexan translucent white, or other Department-approved equal plastic material with equivalent or better weathering, structural, and optical properties.

   Provide a face that is 0.125 inch thick ±10 percent. Mark each face with the plastic name or trade name.

   Provide sign faces with a message applied to the outside. For black sign copy, provide 3M Company, Scotchcal, ElectroCut Film No. 7720 12 and for red copy, provide 3M Company Scotchlite, ElectroCut Film (E.C. Film) No. 1172, or Department-approved equals. Provide a symbol or text message, of one or two colors, as shown on the plans, or specified by the Engineer at the time of the order.

2. **Changeable Message Case Sign.** Provide changeable message case sign faces, designed to clearly and legibly display three distinct fiber optic messages, one message at a time, when energized under any lighting conditions. Refer to standard FHWA and MMUTCD legends to provide a single or multi message overlay.

Form the message with single or double rows of fiber optic glass bundles. Ensure the energized bundles are highly visible within a 60-degree cone centered around the optic axis.

3. **Non-Illuminated Case Sign Panel.** Provide non-illuminated case sign panel sections meeting the requirements of subsection 919.02.C. Provide reflective sheeting material meeting the requirements of ASTM D 4956, for Type IX retroflective sheeting unless otherwise required.

   Provide one-piece case sign panel sections of Type III aluminum sheet with no vertical splices.

   Apply the reflective and non-reflective legends in accordance with the sheeting manufacturers' recommendations. Provide legends that display one symbol or text message as shown on the plans and in accordance with the MMUTCD.

   Insert the case sign panel into the front track in the door.

   For sign panels without legends, provide aluminum panels, or as directed by the Engineer. Coat the exterior face with a semi-gloss or gloss yellow enamel. Provide a color within the limits shown on the Highway Yellow Color Tolerance Chart for the central color, except provide a color darker than the central color. Coat the interior face with a semi-gloss or gloss white enamel.

F. **Wiring.** Provide illuminated case signs completely wired. Provide 600 volt, No. 18 AWG soft annealed copper wiring with the following characteristics:

1. Color coded,
2. At least seven strands, and
3. Insulation of 194 °F THHN thermoplastic or 194 °F neoprene and marked.

Provide wiring that runs neatly in flexible aluminum conduit between the power supply and the socket housing. Where conductors pass through an opening in sheet metal or conduit, provide bushings, grommets, or rolled edges to protect conductors.

Make splices and terminations at the terminal block, switch, lampholder leads, or ballast leads. Make splices mechanically and electrically secure using insulated pressure-type, solderless connectors. Make terminations mechanically and electrically secure using insulated pressure-type solderless terminals. Provide nickel-plated brass wire connecting screws, tabs, washers, and strips.

Mount switches and prevent them from turning by providing mechanical means other than friction.

G. **Painting Requirements.** Before painting the case sign, clean metal surfaces and surface treat in accordance with standard industry practice to ensure paint bonds to the metal.

Provide a coating system consisting of durable and weather-resistant enamels of the required color, applied in a uniform thickness, without blisters, runs or other defects. Provide an average dry film thickness of 1.5 mils, determined by Method A, "Inductance Thickness Gauge," as specified by ASTM D 7091, "Measurement of Dry Film Thickness of Nonmagnetic Coatings of Paint, Varnish, Lacquer, and Related Products Applied on a Nonmagnetic Metal Base." Coat the metal interior of the sign with a semi-gloss or gloss white enamel.

Coat the exterior of the sign with a semi-gloss or gloss yellow enamel. Provide a color within the limits shown on the Highway Yellow Color Tolerance Chart for the central color, except provide a color darker than the central color.

H. **Packing and Marking.** Provide finished signs with a permanent legible marking that includes the supplier's name, trademark, or other means of identification.

Package signs individually for transport by common carriers without damage or defacement to the sign during transportation. Mark each package is legibly with the descriptions of contents and supplier's name.

I. **Inspection.** The Department will perform inspections of illuminated and non-illuminated case signs. Provide mill test reports for aluminum extrusions upon the Department's request.

At the time of delivery, ensure the supplier provides a general certification, stating that materials meet pretreatment requirements, as specified by subsection 921.06.E. Ensure the certification references the method and material used in the pretreatment process.

921.08. Traffic Loop.

A. **Traffic Loop Wire.** Provide loop wire and loop lead-in wire meeting the requirements of subsection 918.03.

B. **Traffic Loop Sealant.** To seal and encapsulate detector loop wires in concrete or hot mix asphalt (HMA) roadway surfaces, provide sealant in cartridges for use with a common 1 quart manual caulking gun or air powered caulking gun. Provide sealant meeting the following requirements:

1. Consists of one part moisture curing and self leveling polyurethane, not containing a level of solvents that would cause an incompatibility with asphalt. If installing traffic loop in existing pavement before placing a final asphalt wearing course, provide sealant compatible with the asphalt wearing course.
2. Minimum temperature range for application from 40 °F to 100 °F, and a minimum service temperature range from −40 °F to 200 °F.
3. Dielectric constant greater than 6 at 50 Hertz, and greater than 4 at 500 Hertz or greater.
4. Viscosity from 28,000 cPs to 48,000 cPs, tack free within 24 hours or less after application.
5. Non-stringing and capable of opening to traffic immediately after sealant recesses ⅛ inch.
6. Provides complete encapsulation of the detector loop wires in a rubber-like environment, and provides protection against moisture, wire and thermal pavement movements, and damage under normal roadway conditions.
7. Moisture cure to a tough, long lasting seal that resists weather, abrasion, oils, gasoline, anti-freeze solutions, brake fluids, and road salts and other deicers.
8. Remains permanently flexible without shrinking or pulling-out of the saw cut groves after application. Ensure cured sealant is temperature stable throughout the specified minimum service temperature range without performance degradation.

C. **Packaging and Marking.** Deliver materials in the original, tightly sealed containers, clearly labeled with the manufacturer's name, product identification, and lot number. Pack each case of cartridges to prevent damage or defacement to the cartridges during transportation to the project. Mark each carton legibly with a description of the contents and the supplier's name.

921.09. Digital Loop Detector. Provide digital loop detectors meeting current and applicable NEMA standards. Provide high performance, two or four channel, inductive loop vehicle detectors with liquid crystal displays (LCD) to indicate the operational, setup, and loop diagnostic parameters of the loop detector system in accordance with the minimum design, operational, and functional performance requirements specified in this subsection.

A. **Detector Loop Requirements.** Provide detector units meeting the environmental, transient, and size requirements of NEMA Standards TS-1 1994, Section 15, TS-2, 2003 Section 6.5, and California/New York Type 170/179 specifications.

Provide microprocessor controlled, fully digital, self tuning detector units with two or four operationally independent channels. Ensure the detector unit is configured as a rack-mounted printed circuit board for insertion into a NEMA TS-1 and TS-2 rack, or Caltrans Type 170 detector input file.

Provide a detector with optically isolated, solid state outputs, designed to provide a continuous “fail-safe” output in the event of power loss to the unit. Ensure each channel provides a continuous fail-safe output and indication in response to an open or shorted loop.

Provide a detector that uses two spring-loaded toggle switches per channel to setup and retrieve information from the detector.

Provide a detector unit that displays and records open loops, shorted loops, or an excess inductance change greater than 25 percent. Program the LCD and yellow fault LED to display the type of error. Program the LCD to display “Shorted loop,” “Open loop,” or “25% DL/L” and log the most recent 25 events. Provide units that store the information in non-volatile memory.

Ensure each channel includes two, wide angle, high visibility LED indicators.

Provide channels with a red LED to display channel detect output status, output state, and the status of the delay and extension timers, plus a yellow LED to display loop fault monitor diagnostics.

Ensure the red channel detect LED indicator flashes at a rate of 2 hertz during delay timing and flashes at a rate of 4 Hertz during extension timing.

Ensure the yellow fault LED flashes once to indicate an open loop, twice to indicate a shorted loop, and three times to indicate an excessive change in inductance.

During fault indication, ensure the red channel detect LED flashes at the same rate as the yellow fault LED to indicate a current fault. If the fault self-heals, ensure the red LED returns to normal operation and the yellow fault LED continues to flash, indicating a prior fault.

B. **Graphic Liquid Crystal Display.** Provide a graphic LCD unit capable of displaying two or four channels simultaneously.

Provide a unit capable of setting up channels simultaneously and resetting channels individually.

Provide a unit that uses a white back light for the LCD. Do not provide units with electro-luminescence.

C. **LCD Full Prompting Menu System.** Provide an LCD unit that prompts the user with word prompts in English for easy setup, operation, diagnostic, and information gathering operations.

Provide a menu system that prompts the end user for the input specified in this subsection during setup and operation.

1. **Sensitivity.** Ensure the LCD prompting menu offers a range of sensitivity values from 1 to 15, and an “OFF” option that disables the channel. Provide a system that displays a pie chart showing the deflection caused by vehicles on the loop, to assist in determining the correct sensitivity, and an XY chart showing the deflection values and vehicle calls over time.

2. **Frequency.** Provide an LCD prompting menu that displays eight frequency values that the user can select from, depending on the frequency of adjacent loops. Ensure the actual frequency is displayed and can be compared to adjacent detectors to achieve maximum separation between adjacent loops. Provide a unit capable of graphically displaying noise or crosstalk on the display.

3. **Operational Mode.** Provide an LCD prompting menu that allows users to select one of two operational modes: “Pulse” or “Presence.” If selecting “Presence,” program the unit to prompt the user for “Short,” “Long,” or “User Defined Presence.”

4. **Timing.** Ensure the timing menu for “Delay” and “Extension” prompts the user for a “yes” or “no” response. If selecting “yes,” program the unit to prompt for the delay amount and extension timing.

5. **Count.** Provide a count that controls the secondary count outputs and prompts the user for a “yes” or “no” response. If selecting “yes,” program the unit to prompt the user for the loop configuration from which it will take the counts and if secondary count outputs are active.

6. **Approach ID.** Program the unit to prompt the user to select alpha-numeric characters to identify the related approach of the channel (e.g. SBLT for south bound left turn).

7. **Display.** The “Display” selection determines the display that shows during normal operation at power up. Program the unit to prompt the user for frequency (FREQ), inductance (INDUCT), and count (Count). Ensure pressing “down” cycles through the display options.

8. **Event Logs.** Ensure selecting “Logs” allows the user to view the last 25 events, the most recent first, on a per channel basis. Provide a

log with the type of fault, power up, power loss, and reset events, and the time elapsed after each event.

D. **Edge Connector Description.**

Table 921-4 Edge Connector Description	
Pin No.	**Function**
A	DC Supply - (Logic Ground)
B	DC Supply + (12 VDC – 24 VDC)
C	Reset
D	Loop Input Channel 1
E	Loop Input Channel 1
F	Call Output Channel 1 (Collector)
H	Call Output Channel 1 (Emitter)
J	Loop Input Channel 2
K	Loop Input Channel 2
L	Earth Ground
S	Secondary Count Output Channel 1
W	Call Output Channel 2 (Collector)
X	Call Output Channel 2 (Emitter)
Y	Secondary Count Output Channel 2
1	Green Input Channel 1
2	Green Input Channel 2
7	Status Output Channel 1
20	Status Output Channel 2

E. **Operation Requirements.** Provide detector units designed to operate over a voltage range from 10.8 VDC to 28 VDC. Provide a power supply that operates over a voltage range from 10.8 VDC to 28.8 VDC, and at no greater than 90 milli-amperes for back light illuminated units. Provide detector units with the following characteristics:

1. Loop tuning range from 20 micro hertz to 2,500 micro hertz, plus a lead-in with a range from 15 kilo Hertz to 60 kilo Hertz;
2. Q–factor of 5 minutes;
3. Low (true) inputs of less than 8 volts, and high (false) inputs greater than 16 volts;
4. Solid state, optically isolated call output. Ensure the “On” voltage is less than 1.5 volts at 50 milli-amperes collector current;
5. Status and count outputs no greater than 50 volts collector voltage, with an “On” voltage less than 1.5 volts at 50 milli-amperes collector current;

6. The following physical dimensions:
   a. 7 inches by 4.5 inches international card with 44 pin double-sided gold-edge connector, and
   b. 1.12 inch wide faceplate with 3 inch by 1 inch handle;
7. Weight of 1 pound; and
8. Functional from −29 °F to 165 °F at a maximum non-condensing humidity of 95 percent.

F. **Functional Data and Parts Lists.** Ensure the manufacturer provides a complete set of the following items with each loop detector, directly applicable to the loop detector with which the item is supplied:

1. Schematic and wiring diagrams of the loop detector and terminal facilities,
2. Instructions for loop detector installation and maintenance, and
3. Parts list.

G. **Packing and Marking.** Package each loop detector separately to prevent damage or defacement to the loop detector during transportation. Mark each carton legibly with the loop detector description, contract number, and supplier's name.

921.10. Steel Truss Arms. Provide steel truss arms for mounting video detection cameras and radio antennae as shown on the plans and in accordance with this subsection.

A. **Truss Brackets.** Provide truss brackets formed from round tube and steel bar or plate, complete with stainless steel U-bolts, nuts, and washers for mounting to steel poles or curved plate with bolt holes for mounting to wood poles. Provide trusses with an 18-degree rise in the top arm tube, from the mounting plate to the location of the device attachment. Locate a ⅞ inch rubber grommet within 3 inches of the mounting base plate on the underside of the upper arm tube.

B. **Truss.**

1. **Wood Pole Mount.** Provide arm tubes meeting the requirements of ASTM A 500, for Grade B steel, with 2⅞ inch outside diameter (OD) by 0.203 inch thick tubing overlapped and welded to 2⅜ inch OD by 0.154 inch thick stock tubing for 16 foot, 18 foot, and 20 foot arms, or 2⅜ inch OD by 0.120 inch thick for arms no longer than 15 feet.

   To form the truss, weld ½ inch by 2 inch flat bar steel, meeting the requirements of ASTM A 36, between arm tubes. Provide a pole mounting plate, formed using ⅜ inch ASTM A 36 steel plate and plate gussets welded to the arm tubes in accordance with the mounting plate detail shown on the truss arm drawing.

Provide one plate per arm tube. Ensure each plate incorporates two 0.562 inch diameter holes and one 0.687 inch by 1.50 inch keyhole for lagging to the wood pole.

2. **Steel Pole Mount.** For 1½ foot, 4 foot, 6 foot, 9 foot, 12 foot, 15 foot, and 18 foot arms, provide arm tubes meeting the requirements of ASTM A 500, for Grade B steel, with 2⅜ inch OD by 0.120 inch thick tubing, welded to ¼ inch formed steel mounting plate meeting the requirements of ASTM A 36.

   To form the truss, weld ½ inch by 2 inch flat bar steel meeting the requirements of ASTM A 36, between arm tubes. Provide ¼ inch flat bar steel gussets welded between the arm tube and mounting plate.

   Use steel U-bolts and other hardware, meeting the requirements of ASTM A 36, to attach trusses to the steel pole. For poles with a diameter range from 8½ inches to less than 9⅛ inches, use ⅝ inch rod bolts. For poles with a diameter range from 9⅛ inches to 10¼ inches, use ¾ inch rod U-bolts. Use hex nuts, flat, and lock washers for fastening U-bolts.

C. **Finishes.** Provide truss arms, brackets, and hardware, hot-dipped galvanized after fabrication and welded in accordance with ASTM A 123 and ASTM A 153. Weld in accordance with AWS D1.1 Structural Welding Code - Steel.

921.11. Mast Arm Mount Signal Bracket. Provide adjustable mast arm mount signal brackets in accordance with Figure 921-1 and this subsection.

A. **Adjustability.** Ensure the bracket is adjustable as shown in Figure 921-1, A through D.

B. **Attachment.** Provide the bracket with Type 201 stainless steel band to fasten the bracket to the supporting arm or structure. Provide an easily adjustable bracket to fit all sizes of round, octagonal, elliptical, or other shaped structure without special tools or equipment.

C. **Signal Accommodations.** Attach the bracket to the signal by clamping the signal from the top and bottom to ensure maximum rigidity. Provide a standard bracket, as shown in Figure 921-1, to accommodate all major signal manufacturers' signals ranging from a three-section one-way 8-inch signal to a three-section one-way 12-inch signal, or a combination of sizes including 3M and ICC configurations.

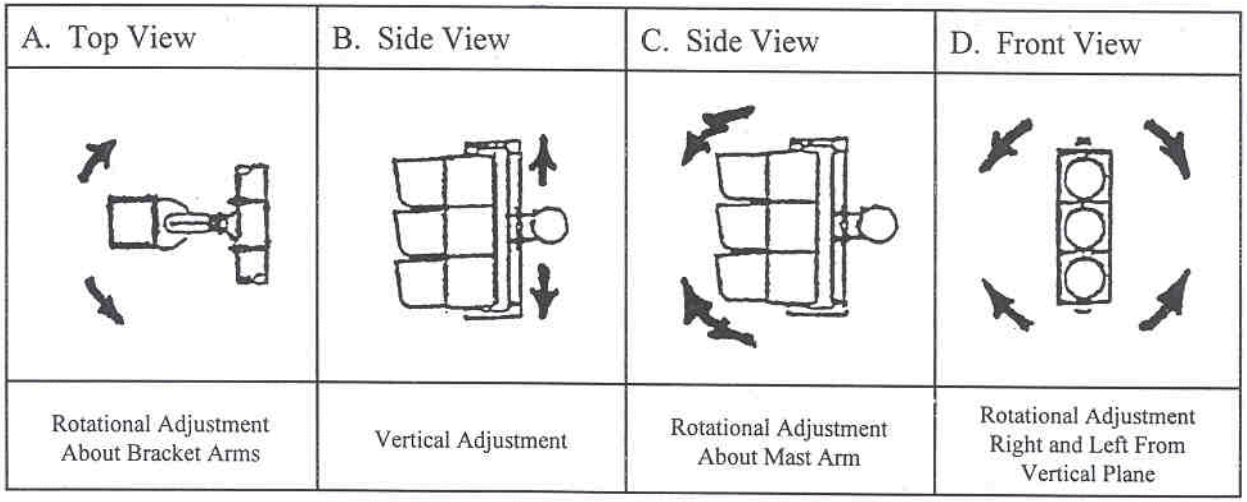

Figure 921-1: Signal Head Bracket Adjustment

Ensure electrical wiring is concealed in the bracket. Provide a gusseted, C-shaped, extruded aluminum tube for the vertical support to accommodate the signal cable, regardless of the vertical position of the tube.

D. **Material and Design.** Provide upper and lower arms cast from 319 aluminum or a Department-approved equal. Ensure the lower bracket arm is internally threaded to accommodate the threaded vertical support tube. Provide the lower arm with ABS plastic covers that will slide and snap into position without fasteners or tools. Ensure the upper and lower arms have 72 tooth serrations cast into the arm to ensure a positive lock with the signal housing, secured around the rotational axis with setscrews. Provide upper and lower arms with a tri-bolt arrangement for attachment to the signal housing. Ensure the lower arm has an opening to accommodate at least three 12 conductor, 14 gauge cables.

E. **The Vertical Support Tube.** Provide a double gusseted, extruded 6082-T8 aluminum alloy tube for the vertical support with the cross section shown in Figure 921-2, Section “A-A.” Provide each tube with a vinyl closure strip, threaded on one end to accommodate the lower arm assembly.

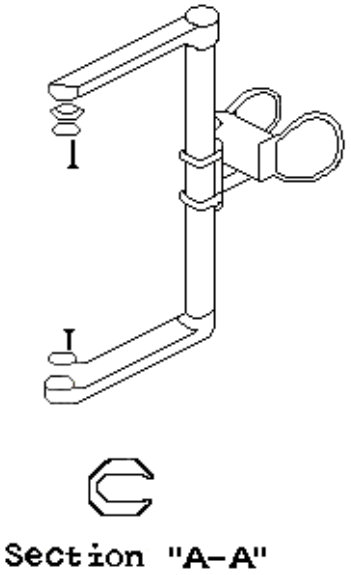

Figure 921-2: Section “A-A”

F. **The Mast Arm Clamp Assembly.** Provide a mast arm clamp assembly with male and female halves cast from 356-T8 aluminum alloy or a Department-approved equal. Ensure the male clamp half is secured in the female half, using a spring steel retainer ring. Ensure the assembly provides an unobstructed center of at least 2 inches in diameter to allow for 360-degree rotation of the clamp assembly. Ensure no internal cross bracing assembly obstructs the center opening.

Provide a mast arm clamp assembly equipped with two stainless steel bands, 1 inch wide, 0.045 inch thick, and 29 inches long. Ensure stainless steel bands have a tensile strength of at least 100,000 psi. Use a set screw secured buckle to secure the band.

G. **The Clamp Screw.** Provide a clamp screw for attaching the stainless steel bands to the clamp kit. Use a $^{7}/_{16}$ inch, 14 inch by 3 inch one piece unit clamp screw, drop forged from C-1045 carbon steel or 410 stainless steel with a tensile strength of at least 80,000 psi, formed with a slot sized to accept a 1 inch band.

H. **Hardware.** Provide each bracket with required bolts, washers, gaskets, and other hardware to attach the signal to the bracket and the bracket to the mast arm.

I. **Finish.** Provide aluminum parts with an Alodine 1200 finish or Department-approved equal.

Provide steel parts with a yellow, zinc di-chromate finish.