SOLUTION TO CLASS EXERCISE #1

GUARDRAIL WORKSHEET (REV. 7-2017)

FOR APPROACH TERMINALS ON R-61-SERIES AND R-62-SERIES

ROUTE Freeway #1 (Exercise #1) CONTROL SECTION 89482 . JOB # EXAMPLE

DESIGNED BY ABC DATE 00/01/18 CHECKED BY XYZ DATE 00/01/18

APPROX. STATION OR M.P. 1362+00 . DESCRIPTION Class Exercise #1

GUARDRAIL RUN # #1

IF STATIONING IS NOT AVAILABLE, LOCATE TO NEAREST FIXED OBJECT

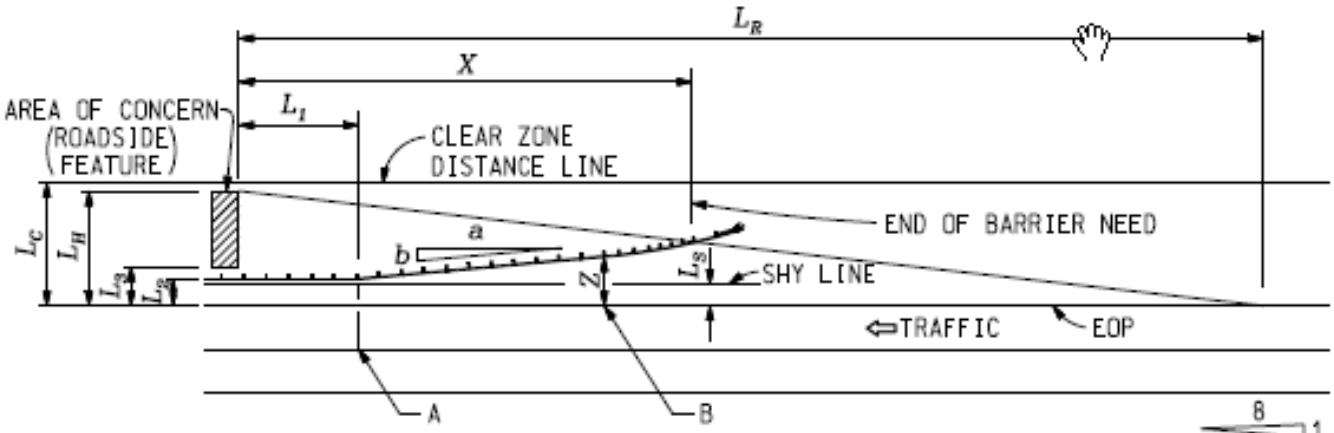

NOTE: TYPE 1 TERMINAL ILLUSTRATED

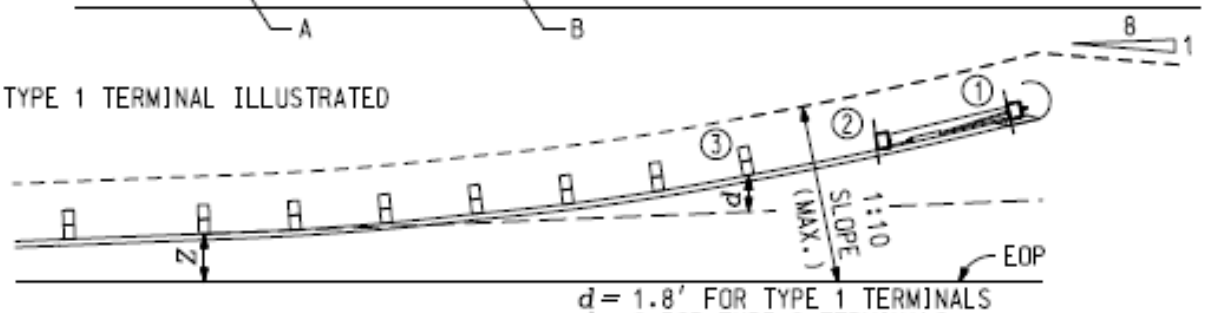

$d = 1.8'$ FOR TYPE 1 TERMINALS
$d = 0$ FOR TYPE 2 TERMINALS

$$X = \frac{L_H + \left(\frac{b}{a}\right)(L_1) - (L_2 + d)}{\frac{b}{a} + \frac{L_H}{L_R}}$$

$$X = \frac{L_H - (L_2 + d)}{\left(\text{No Flare or Type 2 Terminals}\right) \frac{L_H}{L_R}}$$

$$Z = (X - L_1 - 25)\left(\frac{b}{a}\right) + L_2$$

$$Z = L_2 \quad \text{(For Type 2 Terminals)}$$

LENGTH OF NEED ..... X = 235.17'

RUNOUT LENGTH (7.01.19) ..... L_R = 415'

GUARDRAIL TAPER RATE (R-59-SERIES) ..... $\frac{b}{a}$ = 0

E.O.P. TO FACE OF BARRIER (DESIGNED) ..... L_2 = 10.4'

CLEAR ZONE (7.01.11) ..... L_C = 34'

E.O.P. TO ROADSIDE FEATURE (MEASURED) ..... L_3 = 21'

EFFECTIVE TURNED OUT DISTANCE OF ANCHORAGE ... d = 0

LATERAL EXTENT OF ROADSIDE FEATURE (MEASURED) .. L_H = 24'

LATERAL OFFSET AT END OF FLARE ..... Z = 10.4'

DESIGN ADT 22,500 vpd

DESIGN SPEED 75 mph

APPROACH SLOPE 1:6

L_1 = N/A (25' MIN.)

L_S = 10' SHY LINE (7.01.18)

STATION AT A N/A

STATION AT B 1364+12.5

NOTE: DISTANCE OF OBJECT FROM BACK OF BARRIER MUST BE GREATER THAN THE MAXIMUM DEFLECTION (7.01.20)

$L_H \leq L_C$

REFER TO STANDARD PLAN R-59-SERIES AND DESIGN MANUAL SECTION 7.01.30 FOR GUARDRAIL AT EMBANKMENTS

SHEET 1 OF 2

(REV. 7-2017)

PROPOSED TREATMENT

CALCULATIONS OR NOTES

***** Calculations and notes shown on the following sheets *****

DEDUCTION TABLE		
	GUARDRAIL APPROACH TERMINAL	
	TYPE 1	TYPE 2
GUARDRAIL TYPE B	25'	37.5'
GUARDRAIL TYPE T	31.25'	43.75'
GUARDRAIL TYPE MGS-8**	N/A	34.3'

PAY LENGTHS MUST BE DIVISIBLE BY 12.5'. ROUND TO NEXT HIGHEST RAIL LENGTH, EXCEPT WHEN ATTACHING GUARDRAIL APPROACH TERMINAL TYPES 1B AND 2B, RESPECTIVELY, TO GUARDRAIL, TYPE MGS-8.

** NOTE:
DEDUCTION VALUE PROVIDED FOR GUARDRAIL, TYPE MGS-8 IS ONLY APPLICABLE WHEN USING A MASH-COMPLIANT GUARDRAIL APPROACH TERMINAL (I.E., GUARDRAIL APPROACH TERMINAL, TYPE 2M). USE DEDUCTIONS VALUES FOR GUARDRAIL APPROACH TERMINAL TYPES 1B AND 2B, RESPECTIVELY, WHEN ATTACHING NCHRP 350-COMPLIANT GUARDRAIL APPROACH TERMINALS (I.E., GUARDRAIL APPROACH TERMINAL TYPES 1B AND 2B, RESPECTIVELY) TO TYPE MGS-8 GUARDRAIL.

PAY ITEMS

212.5 Ft * Guardrail, Type MGS-8

_____ Ea Guardrail Anchorage, Bridge, Det ___

_____ Ft Bridge Railing, Thrie Beam Retrofit

1 Ea Guardrail Approach Terminal, Type 2M

1 Ea Guardrail Departing Terminal, Type MGS

6 Ea Guardrail Reflector

_____ Cyd Embankment, LM

* FOR THIS PAY ITEM, THE GUARDRAIL APPROACH TERMINAL, TYPE ___ PORTION OF LENGTH OF NEED (X) MUST BE DEDUCTED

Class Exercise #1
Calculations and Notes

Length of Need (X)

X = $\frac{24 - 10.4}{\left(\frac{24}{415}\right)} = 235.17'$

Guardrail Length

Using a Guardrail Approach Terminal, Type 2M with Guardrail, Type MGS-8 in this case

$\therefore$ Min. Guardrail Length = 235.17’ + 3’ – 34.3’ = 203.87’

# of 12.5’ panels = $\frac{203.87}{12.5}$ = 16.31 → 17 panels

$\therefore$ Type MGS-8 guardrail length = (12.5)(17) = <u>212.5 feet</u>

Reflectors

# of reflectors = $(\frac{212.5}{50})$ +1 = 5.25 → 6 reflectors

Stations

Station A → N/A in this case

Station B = (1362+00) + 212.5' ≈ 1364+12.5

Calculating Z

Z = L_2 = 10.4'