# SOLUTION TO CLASS EXERCISE #2

## GUARDRAIL WORKSHEET

(REV. 7-2017)

FOR APPROACH TERMINALS ON R-61-SERIES AND R-62-SERIES

ROUTE Freeway #1 (Exercise #2) CONTROL SECTION 89482 JOB # EXAMPLE

DESIGNED BY ABC DATE 00-01-18 CHECKED BY XYZ DATE 00-01-18

APPROX. STATION OR M.P. 1362+00 DESCRIPTION Class Exercise #2

GUARDRAIL RUN # #2

IF STATIONING IS NOT AVAILABLE, LOCATE TO NEAREST FIXED OBJECT

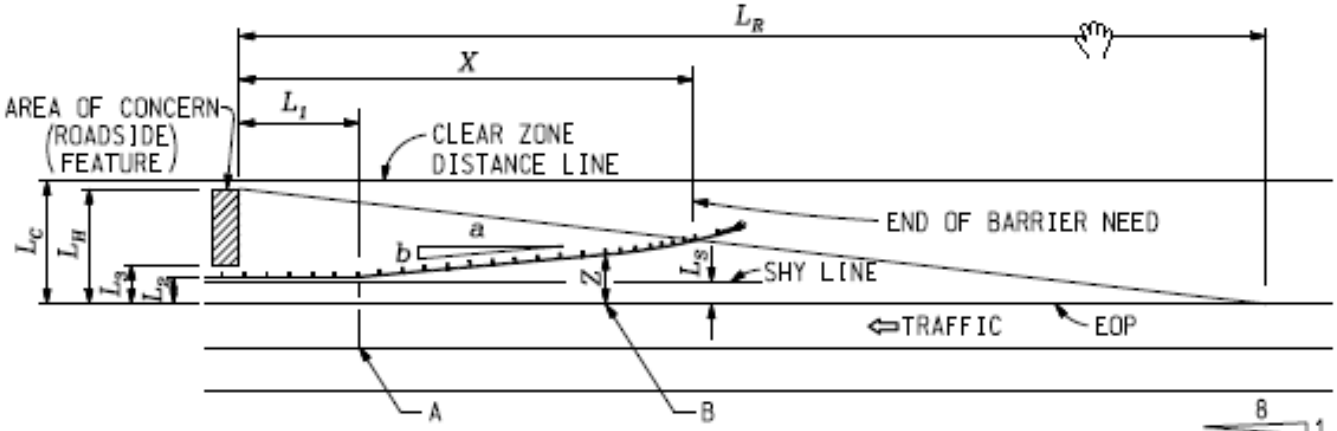


NOTE: TYPE 1 TERMINAL ILLUSTRATED

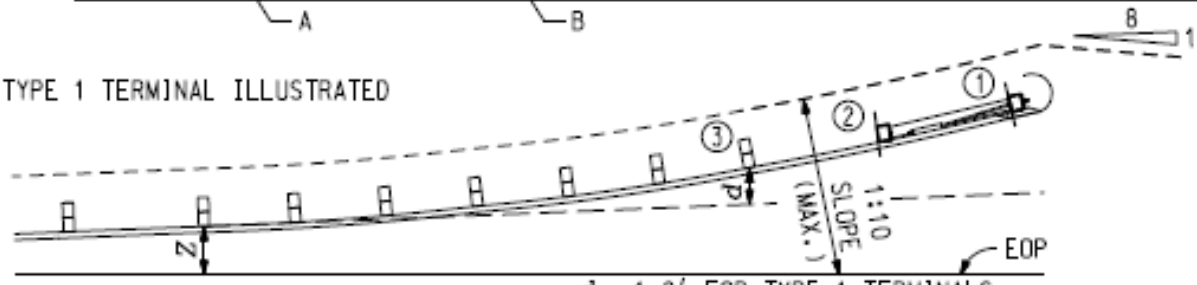


$d = 1.8'$ FOR TYPE 1 TERMINALS
$d = 0$ FOR TYPE 2 TERMINALS

$$X = \frac{L_H + \left(\frac{b}{a}\right)(L_1) - (L_2 + d)}{\frac{b}{a} + \frac{L_H}{L_R}}$$

$$X = \frac{L_H - (L_2 + d)}{\left(\text{No Flare or Type 2 Terminals}\right)\ \frac{L_H}{L_R}}$$

$$Z = (X - L_1 - 25)\left(\frac{b}{a}\right) + L_2$$

$$Z = L_2 \quad \text{(For Type 2 Terminals)}$$

LENGTH OF NEED ..... $X$ = 122.69'

RUNOUT LENGTH ( 7.01.19 ) ..... $L_R$ = 415'

GUARDRAIL TAPER RATE (R-59-SERIES) ..... $\frac{b}{a}$ = 1/15

E.O.P. TO FACE OF BARRIER (DESIGNED) ..... $L_2$ = 10.4'

CLEAR ZONE ( 7.01.11 ) ..... $L_C$ = 34'

E.O.P. TO ROADSIDE FEATURE (MEASURED) ..... $L_3$ = 21'

EFFECTIVE TURNED OUT DISTANCE OF ANCHORAGE ... $d$ = 0'

LATERAL EXTENT OF ROADSIDE FEATURE (MEASURED) . $L_H$ = 24'

LATERAL OFFSET AT END OF FLARE ..... $Z$ = 15.19' **

DESIGN ADT 22,500 vpd

DESIGN SPEED 75 mph

APPROACH SLOPE 1:6

$L_1$ = 25.125' ( 25' MIN. )

$L_S$ = 10' SHY LINE ( 7.01.18 )

STATION AT A 1362+28.1

STATION AT B 1363+00

NOTE: DISTANCE OF OBJECT FROM BACK OF BARRIER MUST BE GREATER THAN THE MAXIMUM DEFLECTION ( 7.01.20 )

$L_H \leq L_C$

REFER TO STANDARD PLAN R-59-SERIES AND DESIGN MANUAL SECTION 7.01.30 FOR GUARDRAIL AT EMBANKMENTS

** Refer to Calculations and Notes

SHEET 1 OF 2

(REV. 7-2017)

# PROPOSED TREATMENT

## CALCULATIONS OR NOTES

***** Calculations and notes shown on the following sheets *****

| DEDUCTION TABLE | | |
|---|---|---|
| | GUARDRAIL APPROACH TERMINAL | |
| | TYPE 1 | TYPE 2 |
| GUARDRAIL TYPE B | 25' | 37.5' |
| GUARDRAIL TYPE T | 31.25' | 43.75' |
| GUARDRAIL TYPE MGS-8** | N/A | 34.3' |

PAY LENGTHS MUST BE DIVISIBLE BY 12.5'. ROUND TO NEXT HIGHEST RAIL LENGTH, EXCEPT WHEN ATTACHING GUARDRAIL APPROACH TERMINAL TYPES 1B AND 2B, RESPECTIVELY, TO GUARDRAIL, TYPE MGS-8.

** NOTE:
DEDUCTION VALUE PROVIDED FOR GUARDRAIL, TYPE MGS-8 IS ONLY APPLICABLE WHEN USING A MASH-COMPLIANT GUARDRAIL APPROACH TERMINAL (I.E., GUARDRAIL APPROACH TERMINAL, TYPE 2M). USE DEDUCTIONS VALUES FOR GUARDRAIL APPROACH TERMINAL TYPES 1B AND 2B, RESPECTIVELY, WHEN ATTACHING NCHRP 350-COMPLIANT GUARDRAIL APPROACH TERMINALS (I.E., GUARDRAIL APPROACH TERMINAL TYPES 1B AND 2B, RESPECTIVELY) TO TYPE MGS-8 GUARDRAIL.

### PAY ITEMS

100 Ft * Guardrail, Type MGS-8

_____ Ea Guardrail Anchorage, Bridge, Det ___

_____ Ft Bridge Railing, Thrie Beam Retrofit

1 Ea Guardrail Approach Terminal, Type 2M

1 Ea Guardrail Departing Terminal, Type MGS

3 Ea Guardrail Reflector

_____ Cyd Embankment, LM

* FOR THIS PAY ITEM, THE GUARDRAIL APPROACH TERMINAL, TYPE ___ PORTION OF LENGTH OF NEED ( X ) MUST BE DEDUCTED

# Class Exercise #2
# Calculations and Notes

## *Length of Need (X)*

$$X = \frac{24 + \left(\frac{1}{15}\right) \times (25.125) - (10.4)}{\left(\frac{1}{15}\right) + \left(\frac{24}{415}\right)} = 122.69'$$

## *Guardrail Length*

Using a Guardrail Approach Terminal, Type 2M with Guardrail, Type MGS-8 in this case

$\therefore$ Min. Guardrail Length = 122.69’ + 3’ – 34.3’ = 91.39’

$\therefore$ # of 12.5’ panels = ( $\frac{91.39}{12.5}$) = 7.31 $\rightarrow$ 8 panels

$\therefore$ Type MGS-8 guardrail length = (12.5)(8) = <u>100 feet</u>

*Reflectors*

# of reflectors = $(\frac{100}{50})$ +1 = 3 → 3 reflectors

*Stations*

Station A = (1362+00) + 3' + 25.125' ≈ 1362+28.1

Station B = (1362+00) + 100' = 1363+00

*Calculating Z*

$Z_{formula}$ = (122.69 - 25.125 – 34.3) × $(\frac{1}{15})$ + 10.4 = 14.62'

$Z_{actual}$ = $L_2$ + $(Distance_{B\text{-}A})$ × $(\frac{b}{a})$

= 10.4 + (100 – 28.1) × $(\frac{1}{15})$ = 15.19'